The UNIVERSITY of VERMONT

Telecommunications and Network Services

# INFRASTRUCTURE STANDARD

**August 31, 2021**

**Revision 1.7**

# UNIVERSITY OF VERMONT TELECOMMUNICATIONS INFRASTRUCTURE STANDARD

January 17, 2014

Revision 1.5

Document developed by:

UVM Telecommunications & Network Services

## INTRODUCTION

The University of Vermont's (UVM's) Telecommunications & Network Services is proud to release the UVM Telecommunications and Network Services Infrastructure Standard - Release 1.0. In conjunction with UVM's Campus Planning Office, Physical Plant, and Facilities, Design and Construction, and with the endorsement of the Office of the President, this standard has been developed to ensure the deployment of a uniform and cost efficient telecommunications, data and cable television network infrastructure. These specifications are based on nationally recognized industry standards as developed by the Building Industry Consulting Services International (BICSI), National Electrical Code (NEC), National Fire Protection Agency (NFPA), Telecommunications Industry Association/Electronic Industries Association (TIA/EIA), Institute of Electricians and Electrical Engineers (IEEE), and (BoCA) which will ensure the long term viability of the network infrastructure to meet the University's on-going needs for voice and data services.

## MISSION STATEMENT

The mission of UVM Telecommunications & Network Services is to be the "Coordinator and provider of telecommunications transport services on and off of the campus for the University of Vermont." The scope of responsibility includes, but is not limited to: all copper, coax and fiber wiring infrastructure for both outside plant and building interiors whether within or between campus locations, all associated conduit systems and telecommunication rooms, all aspects of the UVM voice and data network equipment, and the CATV network. This also includes all aspects of provisioning and maintaining voice services including local dial tone, calling features, long distance services, voice mail, and tele-conferencing, telecommunications consulting, operator services, and wireless technologies.

UVM Telecommunications and Network Services (TNS) has the responsibility to design, develop, approve, install, maintain and manage the telecommunications wiring and infrastructure in all UVM owned and leased buildings and properties. This includes telecommunication rooms, raceways, conduit systems, duct banks and the campus telecommunications maintenance system. Such responsibility implies a first right of refusal by UVM Telecommunications and Network Services on all wiring design, development, approval, installation, maintenance and management.

## IMPLEMENTATION OF STANDARD

UVM Telecommunications and Network Services works closely with many departments at UVM to assure that this mandate is carried out. The alternatives are as follows:

In conjunction with A&E Services and Campus Planning, the TNS reviews design documents in several phases of completion to assure their compliance to local and national standards and codes. Typically design development, conceptual drawings, and 35%, 65%, 95% and 100% CD drawings are reviewed by the TNS. The TNS then provides input on the conceptual designs and follows through on the implementation of required changes throughout the remainder of the design process.

Telecommunications and Network Services will work with design professionals, department heads and electrical engineers to ensure that they have ready access to this standard for reference when questions or conflicts should arise in any construction or renovation process. Through close interaction during the design of new projects, the review of renovation projects and future campus planning the entire design team assures that uniform, cost effective and high quality telecommunications infrastructure systems are installed.

We are pleased to have this valuable tool available to you to assist in the design of telecommunications infrastructure at the University of Vermont. Please feel free to contact the office of Telecommunications and Network Services as needed for further assistance during the design process for telecommunications infrastructure at the University. Our goal is to be available to assist you at any time before or during the decision making process. Some portions of these specifications may require adjustments to fit the particulars of any given project. All modifications should be reviewed with the office of Telecommunications and Network Services for Final acceptance before publishing for bid process.

**Download the UVM Telecommunications and Infrastructure Standard (PDF) at:**

**www.uvm.edu/telcom**

# Index

**Section 27800 – Grounding and Bonding**

- **I. Grounding Backbone**
- **II. Underground Cable**
- **III. Maintenance Hole – Grounding and Bonding**
- **IV. Building Entrance Protection**

**Section 27900 – Identification**

**Section 27950 – Support and Warranty**

**Section 27990 – Applicable Codes and Standards**

# SECTION 27000
## BASIC TELECOMMUNICATIONS MATERIALS AND METHODS

## A. GENERAL

1. RELATED DOCUMENTS

   A) Drawings and general provisions of the Contract, including General and Supplementary Conditions and Division 1 Specification Sections, apply to this Section.

2. SUMMARY

   A) This Section includes the following:

      (1) Raceways.
      (2) Conductors.
      (3) Supporting devices for electrical components.
      (4) Telecommunications identification.
      (5) Demolition.
      (6) Firestopping
      (7) Cutting and patching for electrical construction.
      (8) Touchup painting.
      (9) Appendix A – typical construction details

3. DEFINITIONS

   A) EMT: Electrical metallic tubing.

   B) FMC: Flexible metal conduit.

   C) IMC: Intermediate metal conduit.

   D) LFMC: Liquidtight flexible metal conduit.

   E) RNC: Rigid nonmetallic conduit.

4. SUBMITTALS

   A) Product Data: For electricity-metering equipment.

   B) Shop Drawings: Dimensioned plans and sections or elevation layouts of electricity-metering equipment.

   C) Field Test Reports: Indicate and interpret test results for compliance with performance requirements.

5. QUALITY ASSURANCE

   A) Electrical Components, Devices, and Accessories: Listed and labeled as defined in NFPA 70, Article 100, by a testing agency acceptable to authorities having jurisdiction, and marked for intended use.

   B) Comply with NFPA 70.

6. COORDINATION

   A) Coordinate chases, slots, inserts, sleeves, and openings with general construction work and, during progress of construction, arrange in building structure to facilitate the electrical installations that follow.

(1) Set inserts and sleeves in poured-in-place concrete, masonry work, and other structural components as they are constructed.

B) Sequence, coordinate, and integrate installing electrical materials and equipment for efficient flow of the Work. Coordinate installing large equipment requiring positioning before closing in the building.

C) Coordinate electrical service connections to components furnished by utility companies.
(1) Coordinate installation and connection of exterior underground and overhead utilities and services, including provision for electricity-metering components.
(2) Comply with requirements of authorities having jurisdiction and of utility company providing electrical power and other services.

D) Coordinate location of access panels and doors for electrical items that are concealed by finished surfaces. Access doors and panels are specified in Division 8 Section "Access Doors."

E) Where electrical identification devices are applied to field-finished surfaces, coordinate installation of identification devices with completion of finished surface.

F) Where electrical identification markings and devices will be concealed by acoustical ceilings and similar finishes, coordinate installation of these items before ceiling installation.

## B. PRODUCTS

1. RACEWAYS

A) Refer to section 27130 for interior pathways.

B) Refer to section 27660 for underground pathways.

2. CONDUCTORS

A) Refer to section 27150 for telecommunications cabling.

B) Refer to section 27160 for horizontal cabling.

3. SUPPORTING DEVICES

A) Material: Cold-formed steel, with corrosion-resistant coating acceptable to authorities having jurisdiction.

B) Metal Items for Use Outdoors or in Damp Locations: Hot-dip galvanized steel.

C) Slotted-Steel Channel Supports: Flange edges turned toward web, and 9/16-inch- (14-mm-) diameter slotted holes at a maximum of 2 inches (50 mm) o.c., in webs.

D) Slotted-Steel Channel Supports: Comply with Division 5 Section "Metal Fabrications" for slotted channel framing.
(1) Channel Thickness: Selected to suit structural loading.
(2) Fittings and Accessories: Products of the same manufacturer as channel supports.

E) Nonmetallic Channel and Angle Systems: Structural-grade, factory-formed, glass-fiber-resin channels and angles with 9/16-inch- (14-mm-) diameter holes at a maximum of 8 inches (203 mm) o.c., in at least one surface.

(1) Fittings and Accessories: Products of the same manufacturer as channels and angles.
(2) Fittings and Accessory Materials: Same as channels and angles, except metal items may be stainless steel.

F) Raceway and Cable Supports: Manufactured clevis hangers, riser clamps, straps, threaded C-clamps with retainers, ceiling trapeze hangers, wall brackets, and spring-steel clamps or click-type hangers.

G) Pipe Sleeves: ASTM A 53, Type E, Grade A, Schedule 40, galvanized steel, plain ends.

H) Cable Supports for Vertical Conduit: Factory-fabricated assembly consisting of threaded body and insulating wedging plug for non-armored electrical cables in riser conduits. Plugs have number and size of conductor gripping holes as required to suit individual risers. Body constructed of malleable-iron casting with hot-dip galvanized finish.

I) Expansion Anchors: Carbon-steel wedge or sleeve type.

J) Toggle Bolts: All-steel springhead type.

K) Powder-Driven Threaded Studs: Heat-treated steel.

4. TELECOMMUNICATIONS IDENTIFICATION

A) Refer to section 27900 for identification requirements for all telecom systems.

B) Refer to section 27660 for identification requirements for underground installations.

5. TOUCHUP PAINT

A) For Equipment: Equipment manufacturer's paint selected to match installed equipment finish.

B) Galvanized Surfaces: Zinc-rich paint recommended by item manufacturer.

## C. EXECUTION

1. ELECTRICAL EQUIPMENT INSTALLATION

A) Headroom Maintenance: If mounting heights or other location criteria are not indicated, arrange and install components and equipment to provide the maximum possible headroom.

B) Materials and Components: Install level, plumb, and parallel and perpendicular to other building systems and components, unless otherwise indicated.

C) Equipment: Install to facilitate service, maintenance, and repair or replacement of components. Connect for ease of disconnecting, with minimum interference with other installations.

D) Right of Way: Give to raceways and piping systems installed at a required slope.

2. ELECTRICAL SUPPORTING DEVICE APPLICATION

A) Damp Locations and Outdoors: Hot-dip galvanized materials or nonmetallic, U-channel system components.

B) Dry Locations: Steel materials.

C) Support Clamps for PVC Raceways: Click-type clamp system.

D) Selection of Supports: Comply with manufacturer's written instructions.

E) Strength of Supports: Adequate to carry present and future loads, times a safety factor of at least four; minimum of 200-lb (90-kg) design load.

3. SUPPORT INSTALLATION

A) Install support devices to securely and permanently fasten and support electrical components.

B) Install individual and multiple raceway hangers and riser clamps to support raceways. Provide U-bolts, clamps, attachments, and other hardware necessary for hanger assemblies and for securing hanger rods and conduits.

C) Support parallel runs of horizontal raceways together on trapeze- or bracket-type hangers.

D) Size supports for multiple raceway installations so capacity can be increased by a 25 percent minimum in the future.

E) Support individual horizontal raceways with separate, malleable-iron pipe hangers or clamps.

F) Install 1/4-inch- (6-mm-) diameter or larger threaded steel hanger rods, unless otherwise indicated.

G) Spring-steel fasteners specifically designed for supporting single conduits or tubing may be used instead of malleable-iron hangers for 1-1/2-inch (38-mm) and smaller raceways serving lighting and receptacle branch circuits above suspended ceilings and for fastening raceways to slotted channel and angle supports.

H) Arrange supports in vertical runs so the weight of raceways and enclosed conductors is carried entirely by raceway supports, with no weight load on raceway terminals.

I) Simultaneously install vertical conductor supports with conductors.

J) Separately support cast boxes that are threaded to raceways and used for fixture support. Support sheet-metal boxes directly from the building structure or by bar hangers. If bar hangers are used, attach bar to raceways on opposite sides of the box and support the raceway with an approved fastener not more than 24 inches (610 mm) from the box.

K) Install metal channel racks for mounting cabinets, panelboards, disconnect switches, control enclosures, pull and junction boxes, transformers, and other devices unless components are mounted directly to structural elements of adequate strength.

L) Install sleeves for cable and raceway penetrations of concrete slabs and walls unless core-drilled holes are used. Install sleeves for cable and raceway penetrations of masonry and fire-rated gypsum walls and of all other fire-rated floor and wall assemblies. Install sleeves during erection of concrete and masonry walls.

M) Securely fasten electrical items and their supports to the building structure, unless otherwise indicated. Perform fastening according to the following unless other fastening methods are indicated:

(1) Wood: Fasten with wood screws or screw-type nails.
(2) Masonry: Toggle bolts on hollow masonry units and expansion bolts on solid masonry units.
(3) New Concrete: Concrete inserts with machine screws and bolts.
(4) Existing Concrete: Expansion bolts.
(5) Instead of expansion bolts, threaded studs driven by a powder charge and provided with lock washers may be used in existing concrete.

(6) Steel: Welded threaded studs or spring-tension clamps on steel.
    (a) Field Welding: Comply with AWS D1.1.

(7) Welding to steel structure may be used only for threaded studs, not for conduits, pipe straps, or other items.
(8) Light Steel: Sheet-metal screws.
(9) Fasteners: Select so the load applied to each fastener does not exceed 25 percent of its proof-test load.

4. FIRESTOPPING

A) Apply firestopping to cable and raceway penetrations of fire-rated floor and wall assemblies to achieve fire-resistance rating of the assembly. Firestopping materials and installation requirements are specified in Division 7 Section "Firestopping."

5. DEMOLITION

A) Protect existing electrical equipment and installations indicated to remain. If damaged or disturbed in the course of the Work, remove damaged portions and install new products of equal capacity, quality, and functionality.

B) Accessible Work: Remove exposed electrical equipment and installations, indicated to be demolished, in their entirety.

C) Abandoned Work: Cut and remove raceway and wiring, indicated to be abandoned, 2 inches (50 mm) below the surface of adjacent construction. Cap raceways and patch surface to match existing finish.

D) Remove demolished material from Project site.

E) Remove, store, clean, reinstall, reconnect, and make operational components indicated for relocation.

6. CUTTING AND PATCHING

A) Cut, channel, chase, and drill floors, walls, partitions, ceilings, and other surfaces required to permit electrical installations. Perform cutting by skilled mechanics of trades involved.

B) Repair and refinish disturbed finish materials and other surfaces to match adjacent undisturbed surfaces. Install new fireproofing where existing firestopping has been disturbed. Repair and refinish materials and other surfaces by skilled mechanics of trades involved.

7. FIELD QUALITY CONTROL

A) Inspect installed components for damage and faulty work, including the following:
    (1) Raceways.
    (2) Building wire and connectors.
    (3) Supporting devices for electrical components.
    (4) Telecommunications identification.
    (5) Concrete bases.
    (6) Telecommunications demolition.
    (7) Cutting and patching for telecommunications construction.
    (8) Touchup painting.

8. REFINISHING AND TOUCHUP PAINTING

A) Refinish and touch up paint. Paint materials and application requirements are specified in Division 9 Section "Painting."

B) Clean damaged and disturbed areas and apply primer, intermediate, and finish coats to suit the degree of damage at each location.

C) Follow paint manufacturer's written instructions for surface preparation and for timing and application of successive coats.

D) Repair damage to galvanized finishes with zinc-rich paint recommended by manufacturer.

E) Repair damage to PVC or paint finishes with matching touchup coating recommended by manufacturer.

9. CLEANING AND PROTECTION

A) On completion of installation, including outlets, fittings, and devices, inspect exposed finish. Remove burrs, dirt, paint spots, and construction debris.

B) Protect equipment and installations and maintain conditions to ensure that coatings, finishes, and cabinets are without damage or deterioration at time of Substantial Completion.

# SECTION 27050
# TELCOMMUNICATIONS SYSTEM SUMMARY / OVERVIEW

## A. GENERAL

1. REFERENCES

A) EIA/TIA 568-B Commercial Building Telecommunications Wiring Standards.

B) EIA/TIA-569 Commercial Building Standard for Telecommunications Pathways and Spaces.

C) EIA/TIA-TSB-67 Transmission Performance Specifications for field-testing of Unshielded Twisted Pair Cabling Systems, October 1995.

D) EIA/TIA-72 Centralized Optical Fiber Cabling Guidelines, October 1995.

E) EIA/TIA 607 Commercial Building Grounding and Bonding Requirements for Telecommunications.

F) International Standards Organization/International Electrotechnical Commission (ISO/IEC) IS 11801, January 6, 1994.

G) Underwriters Laboratories (UL) Cable Certification and Follow up Program.

H) National Electrical Manufacturers Association (NEMA).

I) American Society for Testing Materials (ASTM).

J) National Electric Code (NEC) 2002 edition.

K) Institute of Electrical and Electronic Engineers (IEEE).

L) Building Occupation Code Association (BOCA)

2. DEFINITIONS

A) **AWG** American Wire Gauge

B) **AFF** Above Finished Floor

C) **C** Conduit (EMT unless noted otherwise)

D) **CAT 6** Category 6 Cable

E) **Telecom** A comprehensive telecommunications infrastructure for the Building

F) **HC** Horizontal Cross-connect

G) **HVAC** Heating, Ventilating, and Air Conditioning

H) **IC** Intermediate Cross-connect

I) **ILEC** Incumbent Local Exchange Carrier

J) **ISP** Internet Service Provider

K) **MC** Main Cross-connect

L) **OC** On Center

M) **POP** Point of Presence

N) **RGS** Rigid Galvanized Steel (conduit)

O) **TBB** Telecommunications Bonding Backbone

P) **TBBIC** Telecommunications Bonding Backbone Interconnecting Conductor

Q) **TGB** Telecommunications Grounding Busbar

R) **TMGB** Telecommunications Main Grounding Busbar

S) **TSP** Telecommunications Service Provider

T) **VDC** Voice-Data-Cable

## 3. SYSTEM DESCRIPTION

A) The Building Owner ("Telecom Construction Manager") is responsible for construction and installation of the Telecom system, and may, as the need permits, engage an engineering specialty firm ("Telecom Consultant") to assist in the design, engineering, and construction review of the Telecom system installation.

B) The Telecom for the Building is defined as the cables; innerducts, conduits, ladder racks, and all other cable-supporting hardware; and terminals and all other connecting hardware for use by the Building Owner and others for distributing wired and/or wireless telecommunications signals within the Building.

C) The Telecom is designed to provide building system users with a reliable and flexible infrastructure that will meet anticipated current and future data and telecommunications service needs. The system shall be installed in a neat and organized fashion as outlined in these specifications and as show on associated architectural and engineering drawings where applicable.

## 4. RELATED SECTIONS

A) 27110 Telecommunications Rooms

B) 27120 Service Entrances and Equipment Rooms

C) 27125 Customer Premises Equipment (CPE) Rooms

D) 27130 Interior Communications Pathways

E) 27150 Backbone Cabling

F) 27160 Horizontal Cabling

G) 27170 Firestop

H) 27660 Underground Pathways

I) 27670 Maintenance Holes and Pedestals

J) 27760 CATV

K) 27770 Tracking Systems

L) 27800 Grounding and Bonding

M) 27900 Identification

N) 27950 Support and Warranty

O) 27990 Applicable Codes and Standards

5. SUBMITTALS

A) Project Initiation: Within fourteen (14) days of Notice to proceed, the Telecom Contractor shall furnish the following in a single consolidated submittal:

(1) The name of the person who will act as the Telecom Contractor's official contact with theTelecom Construction Manager/Telecom Consultant.

(2) Permits. The Telecom Contractor shall obtain all required permits and provide copies to the Telecom Construction Manager/Telecom Consultant.

(3) Telecom Contractor shall furnish complete manufacturer's product literature for the portion of the installation that said contractor is required to supply materials**. In a typical installation, the University supplies materials such as cable, terminal blocks, patch panels, jacks, faceplates and equipment racks that are associated with the installation and termination of both horizontal and backbone cabling on campus. Generally, the Telecommunications and Network Services (TNS) terminates and tests the cabling and the contractor is responsible for furnishing and installing all components associated with the installation of cabling support and pathways, as well as the actual pulling of the cable from the origination to the destination locations as required.** The Contractor must verify the extent of their responsibilities for each particular installation with the TNS prior to submitting a bid to perform the work. In addition, whenever substitutions for recommended products are made (pre-approved prior to bid by Telecom Construction Manager/Telecom Consultant), samples, as well as the manufacturer's supporting documentation, demonstrating compatibility with University approved products shall be included in submittal.

(4) An Exceptions List: A list of deviations (in materials, construction and workmanship) from those specified in the following specifications sections and shown on the Project Drawings. The Telecom Construction Manager will review this list and declare each item as either an approved exception, or as one the Telecom Contractor must correct.

(5) Inspection and Test Reports: During the course of the Project the Telecom Construction Manager or Telecom Consultant shall maintain an adequate inspection system and shall perform such inspections to insure that the materials supplied and the work performed conforms to Contract requirements. In a typical installation, the TNS terminates and tests all horizontal and backbone cables. Should a cable pair(s) or fiber strand(s) not meet system performance under installed conditions in accordance to current industry standards, to include, but not limited to ANSI/TIA/EIA-568-B and all approved addendums, including amendment 5, ANSI/TIA/EIA-TSB-67, and ANSI/TIA/EIA-95 for copper and ANSI/TIA/EIA-568-B.1, ANSI/TIA/EIA-526-14, ANSI/TIA/EIA-526-7 and TIA/EIA-455-53A for fiber, then the TNS removes the terminals and tests the wire. If it is determined by the TNS that the cable pair(s) or fiber strand(s) is the cause of the substandard testing results, then it is the cabling contractor’s responsibility to return to the site (as many times as required), until the cable or fiber strand in question meets the required performance standards. In instances that the University may require the

Telecom Contractor to terminate and test the telecommunications cabling (turn key installation), the Telecom Contractor shall provide written documentation, which indicates acceptance testing was conducted as outlined in Section 27770, tracking systems. The Telecom Contractor shall also provide documentation, which indicates that all cable termination testing was completed, and that all irregularities were corrected prior to job completion for Telecom Construction Manager/Telecom Consultant analysis.

B) Telecom Contractor

(1) The Telecom Contractor shall be a firm normally employed in the low voltage cabling industry with a reference list of five (5) projects and contact names to confirm successful Category-rated UTP and Fiber-Optic cable plant projects.

(2) The Telecom Construction Manager reserves the right to exercise its discretion to require the Telecom Contractor to remove from the project any such employee the Telecom Construction Manager finds to be incompetent, careless, or insubordinate.

(3) The Telecom Contractor must be licensed and bonded in the state. Additional insurance limit requirements may also apply, including listing the University as an additional named insured.

(4) All clean up activity related to work performed will be the responsibility of the Telecom Contractor and must be completed daily before leaving the facility.

6. INTERPRETATION

A) In any case where Telecom Contractor identifies unclear or imprecise drawings or specifications, Telecom Contractor shall contact Telecom Construction Manager, who shall furnish appropriate interpretation.

B) If and when a conflict is identified between the written specification and the accompanying drawings, the drawings shall be considered to be the prevailing document.

## B. PRODUCTS

1. GENERAL WIRING

A) The inside/outside wiring plant shall be installed per requirements of these specifications using materials meeting all applicable TIA/EIA standards.

B) Materials shall be as listed or shall be equivalent products of other manufacturers meeting the intent and quality level of the TIA/EIA 568-B and all approve addendum specifications. All approved equivalent products will be published by addendum prior to bid. In some cases specific materials are called out to maintain a uniformity of application across all installations. The Telecom Contractor shall maintain the same material uniformity for all buildings.

C) All products shall be new, and brought to the job site in original manufacturer's packaging. Electrical components (including innerduct) shall bear the Underwriter's Laboratories label. All communications cable shall bear flammability testing ratings as follows:

(1) CM Communications Cable.
(2) CMP Plenum-rated Communications Cable.
(3) CMR Riser-rated Communications Cable.

2. QUALITY CONTROL

A) Initial Cable Inspection: The Telecom Contractor shall inspect all cable prior to installation to verify that it is identified properly on the reel identification label, that it is of proper gauge, containing the correct number of pairs, etc. Note any buckling of the jacket, which would indicate possible problems. Damaged cable, and/or any other components failing to meet specifications shall not be used in the installation.

3. QUALITY ASSURANCE

A) All work shall be in compliance with IEEE Standard 802.

B) All work shall be free from ground loops and unintended ground connections.

C) All network computer cables shall be routed to avoid proximity to sources of electrical interference including, but not limited to lighting ballasts, transformers, and electric motors.

D) If the installed work is found to be incomplete or improperly installed, Contractor agrees to return to jobsite as many times as necessary to correct any problems found.

E) All equipment shall be fully listed for the intended use.

F) All products must be tested to EIA/TIA, ISO, IEEE, and ANSI standards latest revision where applicable.

4. MATERIAL INTERPRETATION

A) This specification contains all products currently approved by the Owner. The Telecom Contractor should not assume that materials listed in this specification must be installed merely because they are listed in this specification. Project-specific detail on required materials is further defined in the accompanying project drawings.

5. WARRANTEES

A) All cabling products and installations shall include manufacturers extended warrantees which guarantee stated performance specifications for a minimum period of 20 years. Contractors must be fully trained and certified to meet any obligations required for such extended warrantee programs. Contractor shall supply written warrantee certification from manufacturer as a requirement for project close out and final Contractor payment. Failure of cabling system products under warrantee period shall be subject to correction or replacement by the installing contractor or designated manufacturer's representative at no additional cost to University of Vermont. Section 2.4, Warrantees applies only for turn key installations.

## C. EXECUTION

1. GENERAL

A) Unless stated otherwise within this specification, requirements set forth within this Section 27050 shall be minimum requirements for the entire specification, 27000 through 27990 inclusive.

2. INSTALLATION

A) This shall be treated as a "showcase" installation. Accordingly, all work shall be superior both functionally, and wherever possible, cosmetically. All cables shall be dressed-in, Velcro wrapped, and secured to the ladder rack, plywood backboard, and/or other suitable surfaces so as to ensure a professional appearance and run straight and parallel to Building lines, with 90° corners where possible. All hardware should be mounted plumb and level, and where multiple hardware units are installed, spacing should be uniform from unit to unit so as to ensure a cosmetically pleasing appearance. Telecom Contractor shall take care to prepare cable lengths that are neither too

short—resulting in kinks and out-of-specification bends—nor too long—resulting in difficult cable management and sloppy appearance. Manufacturer's standard pulling tension and minimum bend radii shall be complied with at all times. Remove and dispose all abandoned cables, equipment, or terminations.

B) Cable Lubricants: Lubricants specifically designed for installing communications cable may be used to reduce pulling tension as necessary when pulling cable into conduit. After installation, exposed cable and other surfaces must be cleaned free of lubricant residue.

## 3. REPAIR/RESTORATION

A) Telecom Contractor shall replace any damaged ceiling tiles that are broken during cable installation.

B) Telecom Contractor shall replace or rework cables showing evidence of improper handling including stretches, kinks, short radius bends, over-tightened bindings, loosely twisted and over twisted pairs at terminals, and sheath removed too far. Contractor shall refer to manufacturer recommendations for proper length of sheath that shall be removed based on cable type and termination.

C) Repair or restoration for sub-standard work is to be at the expense of the Telecom Contractor and at no cost to the University.

## 4. CLEANING

A) All debris, dust, excess materials, and equipment shall be removed from the work area. The Telecom Contractor shall clean any materials or dust from the work area or adjacent surfaces. If areas adjacent to the work are damaged during the course of the work, then the Telecom Contractor is responsible for repairing the damage at no cost to the University.

B) Telecom Contractor shall be responsible for cleanup and removal of all debris resulting from work performed in all telecommunication rooms or other work areas on a daily basis. Cleanup will include, but not be limited to, the use of broom and dustpan on a daily basis, and include vacuum cleaning at the end of the project.

C) Telecom Contractor shall coordinate for the removal of all debris resulting from the work being performed on a daily basis.

D) Final acknowledgment of completion and release of liability shall not be issued until all cleanup is done to the satisfaction of the Telecom Construction Manager.

## 5. OTHER

A) Elevator Telephones - The construction budget for renovations or new facilities should include the costs of elevator telephones. The University's Telecommunications and Network Services group (TNS) will install and maintain all elevator telephones on campus; however, the design professionals must ensure that the conduit is installed. Instrumentation cost shall be budgeted by the construction manager.

B) Wireless Applications - In today's complex data, voice and video wiring environment wired services equal wireless services. Refer to the Wireless Section in this document for information pertaining to the design and installation of wireless services at the University.

C) Documentation - At the completion of each installation, "As Built" information and other supporting documentation shall be provided by those performing work specified in this document. Prior to the beginning of any major and minor construction projects, a complete set of 100% construction documents shall be provided to TNS for review and will be maintained on file.

D) As Built information shall be provided to the TNS in AutoCAD format. Contractor shall confirm with the TNS as to which version of AutoCAD they are currently using at the time of the project, and provide electronic CAD files at project completion in a compatible AutoCAD format.

# SECTION 27110
# TELECOMMUNICATIONS ROOMS

## A. GENERAL

### 1. DEFINITION

A) Telecommunications rooms are special-purpose rooms that house telecommunications equipment. These rooms are built to stringent requirements due to the nature, cost, size, and complexity of the equipment involved. Telecommunications rooms vary according to the size of the building, number of floors, floor space served, occupant needs and services required. Consideration to the future needs of the facility and the end users is a necessity. Telecommunications rooms are typically floor serving and provide a connection point between backbone and horizontal distribution pathways.

B) This section identifies physical space within a building that is critical to the proper management and transport of telecommunications (voice, video, data) services.

Wiring rooms within a building are referred to as Telecommunications Rooms (TRs). TR's are "floor serving". There shall be a minimum of one TR per floor. A TR is not required on the same floor as an equipment room (ER) unless needed due to cable length requirements. It is recommended that multiple TR's should be provided on the same floor if usable floor space exceeds 10,000 sq ft. or the cable pathway length between the horizontal cross-connect in the TR and any telecommunication outlets being served exceeds 250 total feet. Maximum allowed length of horizontal cable installed to outlets must not exceed 295 feet. Pathway length should be kept to a maximum of 250 feet to accommodate the cable length.

The TR rooms may be used separately or in combination as a horizontal cross connect (HC) and an intermediate cross connect (IC). Depending on if the space operates separately or in combination, these spaces can consist of the terminations for the backbone cables in the riser system coming from the ER and the terminations for the horizontal cabling and cross connects coming from the work areas of the floor being served. In addition to cable terminations and cross connects, these rooms may in some cases serve as an equipment room for data, video and other equipment.

The TR rooms are not to be shared facilities for other services and therefore should not house electrical equipment, plumbing, janitor sinks, or to be used as a storage area. Other utilities such as HVAC duct work, electrical conduits, sprinkler system piping, drain pipes, steam pipes, chilled water pipes, or any other building systems not providing direct service to the space, shall not pass through the interior of the room. Any other conceived use for the telecommunications rooms that does not coincide with the intended use of space is not permitted.

The TR rooms shall be directly accessible from a hallway or other common space in the building. Typically, the space shall have only one access door to eliminate the possibility of the room being used as a passage way leading to other areas in the building.

### 2. SPACE REQUIREMENTS

A) Space Requirements for Telecommunications Rooms. Telecommunications rooms, meeting current industry standards shall meet the minimum area allocation for walk-in room as follows:

| Serving Area | Interior Dimensions of Room |
|---|---|
| 5000 ft² or less | (1) 10ft. x 8 ft. |

| | |
|---|---|
| >5000 ft² to 8000 sq. ft² | (1) 10 ft. x 9 ft. |
| > 8000 ft² to 10,000 ft² | (1) 10 ft. x 11 ft. |
| > 10,000 ft² or if max. cable lengths cannot be met* | (2) 10 ft. x 11 ft. |

Smaller Single Story Building

Typically, small single story buildings require less space for providing telecommunications services. In most cases, a single telecommunications room is adequate to serve the entire building. The minimum area allocations for a single TR in a small, single story structure is as follows:

| Serving Area | Interior Dimensions of Room |
|---|---|
| Less than 5,000 ft² | Shallow room (3' x 8.5') |
| Walk in room (5' x 5') | |
| Less than 1,000 ft² | Wall Cabinets, Enclosures, etc |

Note: The design professional shall work with the University's Telecommunications and Network Services (TNS) to determine appropriate cabinet or enclosure sizing.

*Maximum allowed horizontal cable length shall not exceed 295 feet from the mechanical termination located in the telecommunications room and any installed data or voice port. Pathway length from telecommunications room to any telecommunications outlet shall be a maximum of 250 feet.

B) Work Clearances

The NEC Section 110-16 provides requirements for working space and clearance around electrical equipment that is exposed (i.e. unguarded, uninsulated). Per NEC allow a minimum of 1 meter (3.3 ft) of clear working space from equipment and the wall where wall mounted cross-connect fields are being mounted when determining the size of the Room.

Relay Racks are typically installed in TR rooms for the termination of horizontal data cabling, fiber optics and LAN and other equipment.

**Installation is typically made by the TNS. The size of a typical Relay Rack is 19 inches wide, 7 feet 6 inches high, has a 32" footprint and meets ANSI/EIA-310D.**

C) Room Layout

In new buildings the TR's shall be designed to be vertically aligned directly above each other. The TR's shall be laid out as to allow for proper use of space using the following considerations:

- All Outside Plant (OSP) conduits that may enter directly into a TR shall be located on one wall, preferably starting in the left-hand corner inside the door. If it is not possible to locate in the left-hand corner inside the door, conduits shall be installed beginning in a corner of the room. Avoid installing the OSP conduits or riser sleeves in the middle of the backboard area.
- It is recommended that the intra-building backbone riser sleeves be placed directly above the OSP conduits in the TR and in the same location in each stacked TR room so straight pulls can be made from the floor sleeves to the ceiling sleeves.
- Horizontal conduits shall enter on another wall and other services shall be properly distributed along the remaining walls. Any questions about room layout should be directed to the University's Telecommunications and Network Services design professional.
- Avoid mixing entrance, riser and horizontal conduits.

3. GENERAL REQUIREMENTS

A) All work shall comply with the National Electric Code, Local Building Codes, and University of Vermont's Telecommunications and Network Services (TNS) standards. In addition, both the design and construction of telecommunications rooms shall follow the latest guidelines as developed by the Building Industry Consulting Service International (BICSI).

B) All communications rooms shall be equipped with a smoke detector connected to the building fire alarm panel. If sprinkler heads are provided, install wire cages to prevent accidental discharge.

C) Telecommunications Rooms shall be substantially complete prior to the installation of communications cabling. Sheetrock hung; fire-rated plywood installed and painted; floors sealed, tiled or painted; temporary or final lighting installed. The room shall have a lockable door installed.

D) An approved fire extinguisher must be provided just inside the door of each room.

E) Electrical distribution panels are strictly prohibited in any new telecommunications rooms unless the sole use is for service within the telecommunications room.

F) A minimum of a 50 percent growth factor shall be built in and provided in the cable pathways allocated for each riser stack, unless otherwise specified. As a result, any cable or conduit work that pertains to telecommunications must be designed and/or approved by the TNS.

**G)** To facilitate the proper installation, routing and placement of cables, wires, premise equipment, and terminal fields, telecommunications rooms shall be located on the floor they are serving and as close as possible to the center of the floor plate, as opposed to either end. The rooms shall be accessible from a hallway or other common area, and be vertically stacked one above the other in multiple floor structures, unless otherwise instructed by the TNS. Architects responsible for the design of new buildings on campus must incorporate horizontal distribution cabling distance limitations into their floor layouts. **The total horizontal cabling distance (link) from the work area outlet to the mechanical termination in the communications room shall not exceed 275 feet.**

4. TELECOMMUNICATIONS ROOM REQUIREMENTS

A) Ceiling Height – The rooms shall not have a suspended ceiling. The minimum ceiling height shall be 8 feet 6 inches. Preferred ceiling height is 9 feet 6 inches, allowing cable tray to be mounted greater than 8 feet above finished floor with adequate top access to tray.

B) Doors – Doors shall be designed to fully open (180-degrees is recommended), lockable and shall be a minimum of (36-inches) wide and (80-inches) tall. If the space is designed with a double door, eliminate center post or center post must be removable. No door sills shall be installed as they impede equipment movement. All doors shall be keyed alike; locksets shall be a self-locking type function. The TNS shall provide key numbering information and approve in writing all issuances. Doors shall open outward unless prohibited by local building codes. If doors need to swing inward to be code compliant, three (3) feet of usable wall space has been eliminated. Therefore the room size shall be increased to compensate for lost mounting area.

**C)** Floors – Floor loading shall be a minimum of (50 lbf/ft$^2$) as specified by ANSI/TIA/EIA-569-A standards. However, floor loads shall be determined by the equipment to be housed within the space. To minimize dust and static electricity, floors shall be VCT tile or painted with latex paint, gray in color. **Carpet isprohibited.**

**D)** Conduit, Sleeves, Slots – Floor to floor penetrations shall be in the form of either conduit sleeves or slots. When using sleeves, install steel conduit sleeves between stacked telecommunications rooms. The sleeves shall be aligned vertically on each floor. Sleeves entering the space through the floor shall extend three (3) inches above the finished floor. Sleeves entering the space from the ceiling shall extend to 8.5 feet above the finished floor. Locate sleeves in a position that facilitates cable pulling and terminations. All sleeve/conduit ends shall be dressed at the same level and installed with rigid conduit straps or equivalent to the wall. **In any**

**instance where any of the above requirements cannot be met because of structural or other considerations, immediately contact the TNS**.

The location of either sleeves or slots shall be along a wall that has a plywood backboard attached, preferably beginning in the left corner of the room when entering through the entrance door. Under no circumstances shall the floor-to-floor penetrations be located in the vicinity of the center of the space.

The size and quantity of sleeves required is a reflection of usable floor space and type and quantity of backbone cabling to be installed. Refer to table 27110.1. However, the minimum conduit sleeve size shall be 4-inches in diameter (I.D.), with a minimum of four (4) sleeves per floor. All sleeves should be verified as clean, dry, unobstructed and labeled for identification, as well as reamed and fitted with bushings prior to acceptance by the TNS.

Slot sizing is a reflection of usable floor space and type and quantity of backbone cable to be installed. Refer to table 27110.2. However, the minimum slot size shall be 9 inches wide by 6 inches in depth. When a slot is used, the floor penetration shall be protected with a 1-inch high concrete curb located on all sides of the slot, not adjacent to a wall.

**Table 27110.1**

| Usable Floor Area Served ($FT^2$) | Quantity of Sleeves |
|---|---|
| Up to 100,000 | 4 |
| >100,000 to 300,000 | 5-8 |
| >300,000 to 500,000 | 9 -12 |

**Table 27110.2**

| Usable Floor Area Served ($FT^2$) | Size of Slot (inches) |
|---|---|
| <250,000 | 6 x 9 |
| >250,000 to 500,000 | 6 x 18 |
| >500,000 to 1,000,000 | 9 x 20 |
| >1,000,000 to 1,400,000 | 12 x 20 |
| >1,400,000 to 2,000,000 | 15 x 24 |

E) Floors that contain multiple telecommunications rooms shall be interconnected with a minimum of two (2)4 trade size conduits or alternate pathway that provides equivalent capacity. Should conduits enter the space through the structural floor, terminate conduits three (3) inches above the finished floor. For any conduits that enter the space either through walls or ceiling, the conduits shall be turned down and extend to 8 feet 6 inches above the finished floor.

F) Cable Tray – Cable trays provided by and installed by TNS shall loop the entire perimeter of the room. Maintain a 4-inch clearance from each wall. Refer to section 27130 for further cable tray requirements. In addition, in locations were floor-mounted equipment racks are located in the space, sections of cable tray shall be installed above the racks to facilitate cable routing to these locations.

G) Walls – Walls shall be treated to minimize dust. All walls shall be finished (i.e. sheetrock/painted). Fire rated AC plywood backboards, ¾ inch thick, 8 feet high by 4 foot wide shall be mechanically fastened to each wall in the space in a manner that will support the weight of all cables, terminals and equipment that may be affixed to the backboard. Plywood shall be installed with smooth side facing out. Plywood shall be mounted with flush hardware and supports. Strength and placement of supports shall be sufficient to accommodate anticipated load (static and dynamic) of cable and hardware. Paint all plywood with two coats of fire proof paint, white in color. **Do not obscure fire rated stamp on plywood.** Plywood shall cover the entire length of each wall of the space, extending from floor to ceiling. When plywood backboards needs to be attached to concrete walls, a ½-inch wood strapping shall be mounted to the concrete wall between the concrete and the

plywood backboard at 2-ft. on center intervals. Plywood backboards shall be mounted to the strapping as opposed to directly to the concrete.

H) Drainage – Telecommunications rooms will not have floor drains to avoid the threat of back flooding. The rooms shall not be located in any area that may be exposed to flooding.

I) Dust Elimination – The walls and ceilings of all equipment rooms shall be dust free and painted with a light color latex paint. The floor shall be tiled with VCT or painted with a latex paint, gray in color.

J) Fire Protection – Fire protection shall be provided for the space as applicable to local building and fire codes.

5. ENVIRONMENTAL CONTROL

A) All telecommunications rooms shall maintain continuous and dedicated environmental control (24 hours per day, 365 days per year). Emergency generator power is required, and must be sized to accommodate the HVC system that serves the room. Maintain positive pressure with a minimum of one air change per hour. Room environment shall be maintained at a temperature range of 64 to 75 degrees Fahrenheit, with a humidity range of between 35 and 60 percent. Switches or thermostats shall be mounted in close proximity to the entrance door. In instances where the entrance door opens into the space, switches or thermostats shall not be located behind the door when the door is in the open position.

B) No plumbing, HVAC, or electrical conduit shall pass through, or be directly above the space. In any project where new telecommunications rooms are created, all overhead utilities shall be relocated out of the space.

6. POWER REQUIREMENTS

A) Under no circumstances shall electrical equipment (electrical panels, transformers) or any other utility panels be located in any new telecommunications room unless it is for the exclusive use for the room and the equipment within it. In general other low voltage building automation systems such as, fire alarm and CatCard system for example, shall be located in their own space outside of the telecommunications room. These system can be jointly located in a single space with TNS approval and coordination.

B) Multiple, Quadplex, AC outlets must be provided to power telecommunications equipment, a minimum of two per wall, with the center of the backbox located 18 inches above the finished floor. Each outlet shall be a 20 Amp dedicated unit. Outlets may be surface mounted to the plywood backboard. Receptacles must not be controlled by wall switches. The electrical contractor shall route the conduit for powering the outlet from the corner of the wall that the receptacle(s) are to be mounted onto. The conduit shall route vertically down the wall in the corner of the room and then travel horizontally to the receptacle locations at a distance of no greater than 24-inches above the finished floor. In no circumstances shall the electrical conduit be placed in a manner that obstructs or divides the backboard, thus restricting the usable backboard space for the mounting of telecommunications equipment. Typically, the mounting space for telecommunications equipment begins 36-inches above the finished floor and comprises the entire width of the backboard to the ceiling elevation.

C) When required in rooms where floor mounted equipment racks are installed, mounted to cable tray, above each rack, place two dedicated (2) 20 Amp twist-lock receptacles. Wire one receptacle to normal power and the other to emergency power at each rack location. Each overhead receptacle shall be placed on a separate branch circuit.

D) All circuits shall be connected to an emergency generator when available.

E) All telecommunications rooms shall have a ground bar that measures twelve (12) inches long by two (2) inches wide by ¼ inch thick with pre-drilled ¼ inch holes. All conduits terminating to cable trays and wireways shall be mechanically fastened. If connected to a tray, conduit must be equipped with ground bushings and wire bonded to the tray. The cable tray or wire way shall be grounded to main building grounding system.

F) Each room shall contain separate 120 volt AC duplex convenience outlets. Outlets shall be placed at six (6) foot intervals around the perimeter walls. Height of outlets shall be 18 inches AFF.

G) A resistance of .001 ohm or less indicates a high-quality junction per BICSI standards. Reference section 27800 in this document for further details regarding the building grounding riser.

**H)** Lighting – Lighting shall be open 2'x4' fluorescent and provide a minimum equivalent of 500 lux (50 footcandles) 36-inches AFF/(70 footcandles) 3.3 meters AFF. Dimmer switches are prohibited. Locate light fixtures a minimum of 8 feet 6 inches AFF, and their locations shall be closely coordinated with overhead cable tray and equipment rack placement. The room finishes shall be light-colored to enhance room lighting. Emergency lighting is recommended if available. Switches for lighting shall be mounted in close proximity to the entrance door. In instances where the entrance door opens into the space, switches shall not be located behind the door when the door is in the open position. **Coordinate with TNS prior to any lighting design.**

7. EQUIPMENT AND WIRE LABELING

A) All telephone distribution frames and connecting blocks shall be properly identified by destination. Refer to section 27900 for further details. All backbone cables shall be properly marked with a permanent black marker and or metal tag. This marking shall be permanent and indicate the following:

- The Origination (Cable is feeding from)
- The Destination ( Telecommunications room it is feeding)

B) All voice and data cable pairs in backbone cables, or entrance cable must be terminated on a connecting block or a patch panel and labeled/identified.

C) All data outlets shall be labeled with the room number and locations letters or number. Data connection blocks and patch panels shall be similarly labeled.

8. CABINETS AND TERMINAL BOXES

A) For existing installations, retrofits and smaller single story building, the implementation of a dedicated telecommunications room may not be feasible. As opposed to a dedicated telecommunications room, a locked telecommunications enclosure may be used. Approval by the TNS is required prior to the installation of any enclosures on campus.

B) Contiguous wall space required for enclosure placement in lieu of telecommunications room is as follows:

| Building Usable Floor Space | Contiguous Wall Length Required |
|---|---|
| </= 30,000 Square Feet | 48 Inches |

C) Equipment enclosures shall be a minimum of 38 inches wide, 32 inches high and 8 inches deep. However, actual hardware requirements will dictate enclosure sizing for each specific installation. Each enclosure shall contain a full ¾" AC plywood backboard for mounting telecommunications hardware. The plywood shall cover the entire back wall of the enclosure and be installed with smooth side facing out. Grommeted "lay-in" openings shall be placed at the top and bottom of each enclosure.

D) The wall area where the enclosure is to be mounted shall be covered with ¾" AC plywood backboards, 8 feet high. Width of backboard will very as identified under Section 1.8.B. Plywood shall be mounted with flush hardware and supports. Strength and placement of supports shall be sufficient to accommodate anticipated load (static and dynamic) of enclosure, cable and hardware. Paint all plywood with two coats of fire proof paint, white in color. Do not obscure fire rated stamp on plywood. The fire rated plywood backboards shall begin a minimum of four (4) inches AFF and end 8 feet, 4 inches AFF.

E) Telecommunications enclosures shall be placed to allow a 36 inch area of clear space to the front side of the enclosure.

F) Provide a minimum of one (1) Quadplex, AC outlet to supply power to the telecommunications equipment. Each outlet shall be a 20 Amp dedicated unit, positioned directly below the enclosure and placed a minimum of 15 inches above finished floor.

G) Telecommunications enclosures shall not be located within fifteen (15) feet of any electrical equipment (transformer, electrical panels) to minimize possible EMI or RFI interference.

**END OF SECTION**

# SECTION 27120

# SERVICE ENTRANCES AND EQUIPMENT ROOMS

## I. SERVICE ENTRANCES

### A. GENERAL

1. SERVICE ENTRANCE INTRODUCTION

   A) This section provides the necessary guidelines to install service entrances to buildings and information for the termination of cables entering buildings. All outside plant voice, data, and video cabling, conduit and maintenance holes shall be designed and/or approved in writing by the University's Telecommunications and Network Services group (TNS).

   B) The Service entrance is the route by which Telecommunication services/lines enter a building. There are three types of service entrances:

      - Underground Entrance - buried conduit (UVM responsibility).
      - Buried Entrance - cable buried directly in a trench (Service Provider responsibility).

   C) Aerial Entrance - cable drop from a pole to a building. (Service Provider responsibility) Service entrances shall terminate at the main telecommunications room / terminal room location of the building; usually on the ground floor or basement.

2. CABLE

   A) Prior approval and coordination with the TNS and other concerned parties is necessary when the situation requires pulling cable through a conduit occupied by another cable. All cables associated with the campus telecommunications network (telephone, data, LAN, WAN, cable television and fiber optics) shall be disconnected by the TNS or their appointed representative.

   B) Only those cables specified within this document will be installed in any communications facility. There shall be no cable with voltages higher than 48 volts in communications duct banks except as follows: Electrical feeders for sump pumps, lights and outlets that must be installed according to the national Electric Code requirements shall be isolated in separate conduits. All conduits must be extended 4-inches into any maintenance hole. All conduits must be clearly labeled. All copper cables entering a building shall be terminated on protection blocks. Only gas and solid state protectors shall be used. See specifications in 27800.

   C) Damages incurred to any cable are the responsibility of the party involved. All damages shall be reported immediately to the TNS.

3. LABELING OF CABLES

   A) In each maintenancehole, all cables shall be identified with the following information placed on a permanent label attached to the cable supplied by the TNS: the owner of the cable, cable number, cable type, number of pairs and the termination point. The tag shall be made of aluminum or stainless steel.

   B) Typically, all abandoned cable shall be removed from tunnels, maintenance holes, and conduit. If it is not feasible to remove abandoned cable, it shall be clearly labeled at both ends as abandoned, and shall be reported to the TNS.

C) Most of the University's low voltage cabling is underground. No aerial wiring shall be constructed on campus unless approved by the TNS and the University's Architecture and Engineering (A&E) department.

4. SERVICE ENTRANCE CONDUIT

A) Conduit sizing and quantities between buildings shall be determined by the TNS. Minimum requirements are outlined in the following paragraphs. All campus buildings shall be connected to the nearest maintenance hole or new maintenance hole if one is to be installed.

B) Gas and water pipe shall not be used for conduit under any circumstances.

C) **Underground Entrance** – The following recommendations are made for underground entrances:

(1) **T**he recommended size for conduit used in an underground entrance is 4 inches in diameter. A spare conduit of equal size is recommended, thus giving a total of two (2) 4-inch conduits as a minimum into any building less than 10,000 square ft usable floor space. Conduit duct banks entering buildings of over 10,000 square feet shall be sized with the assistance of the TNS. It is desirable for buildings with greater than 10,000 square ft of usable space to have two means of access to the campus underground conduit system.

(2) Conduit must be buried at a minimum depth of 36 inches to top of concrete (or to meet local codes) and encased in concrete rated at 3,000 psi. For conduit that will be placed under a load use 3,500 psi rated concrete. Other special situations may require the use of stronger or a lighter 10 to 1 mixture. These exceptions shall be approved by the TNS. To minimize any chance of accidental dig-up, place a plastic warning tape a minimum of 12 inches below the surface and directly above the conduit. Tape will be provided by the TNS on request. Telecommunications conduit is not to be placed in joint trenches or duct banks with other utilities. A # 6 AWG copper ground wire shall run parallel to the conduit within the concrete encasement. Design of underground entrance should be coordinated with the TNS.

**(NOTE: Telecommunications conduit shall not be poured and encased in the same concrete as the campus high voltage (typical - 5kv-12kv) electrical conduits system. A minimum or 18" of fill shall be between the two utilities.)**

(3) Entrance conduit must not include more than two 90 degree bends without a pull box, handhole or maintenance hole. Bends must be sweeping bends with a radius not less than 10 times the inside diameter of the four inch conduit. No LBs.

(4) Conduit shall be corrosive–resistant of plastic polyvinyl chloride (PVC). Conduits shall be installed with concrete encasement. No PVC conduit is acceptable without concrete encasement. Typically four (4) inch diameter conduits shall be utility grade DB 60, while 1-1/4" diameter conduits shall be Schedule 40.

(5) All 4-inch conduits carrying fiber optic cable shall be compartmentalized into channels via multi-cell duct liner. Verify type and quantity of multi-cell duct liner with the TNS.

(6) Conduits should be verified as clean, dry, unobstructed, labeled for identification, prior to acceptance by the TNS.

(7) Conduits shall have a nylon pull cord with a minimum test rating of 200 lbs pulling strength in each conduit or compartment within a conduit.

(8) When terminating entrance conduit within a building, design conduits entering from:

A) Below grade- to extend 4 inches above the finished floor.

B) Through ceiling - to extend to 8 1/2 feet above the finished floor.

C) Through walls - install with sweeps not less than10 times the inside diameter of the conduit and turn conduit down on wall to extend to 8 1/2 feet above the finished floor.

(9) Seal the inside-the-building end of all conduits to prevent rodents, noxious gases and water from entering building.

(10) All entrance conduits shall be securely fastened to the building so they can withstand a typical cable placing operation.

(11) Telecommunications conduits shall be used for telecommunications cables only and shall not be used for joint use with electrical utilities.

(12) In an underground duct bank, two of the 4-inch diameter conduits shall each have installed in them two Aero-corp triducts, creating a total of twelve channels in the two conduits. In any duct bank section that consists of only two conduits, refer to the TNS for quantity of multi-cell duct liners to be installed.

**Table 1 - Recommended Quantity of Service Entrance Conduits**

| Gross Building Floor Area (x100 Ft Sq.) | No. of Conduits (includes spare) |
|---|---|
| 0 – 20 | 2 (minimum) |
| 20 – 100 | 4 |
| 100 – 500 | 6 |
| 500 – 1000 | 8 |
| 1000 – Verify quantity of conduits with the TNS | |

(13) **Dual** (redundant - two diverse routes) **Service Entrance** - recommended for buildings which provide crucial services, including critical research facilities, hospitals, police stations, fire stations and other similar buildings.

(14) **Buried Entrance** - This method is generally not acceptable. However, temporary service to a building is an acceptable justification for buried cable. Design for buried cable should be coordinated with the TNS.

(15) **Aerial Entrance** - This method is generally not acceptable. However, temporary service to a building is an acceptable justification or installation of cable into an existing facility when underground entrance is too expensive or would disturb vegetation. Pole sizes, clearances and cable sizes should allow for future growth and flexibility and meet all appropriate standards. The installation of aerial cable entrance facilities and associated supporting structures should be coordinated with the TNS. Design professionals and contractors shall contact the TNS project manager for evaluation and determination of exceptions to design guidelines for entrance conduit.

# I. Equipment Rooms

## A. General

### 1. DEFINITION

A) Equipment rooms (ER) are special purpose rooms that provide space and maintain a suitable operating environment for large communications and/or computer equipment. These rooms are built to stringent requirements due to the nature, cost, size, and complexity of the equipment involved. Consideration to the future

needs of the facility and the end users is a necessity. Equipment rooms are typically building or campus serving, thus they may be used to connect inter and intra backbone pathways.

B) The primary telecommunications room for the entire building is the Equipment Room. This room can also serves as the entrance facility for the building, where all outside plant conduits terminate. It houses the Main Cross-connect (MC), where the service entrance cables terminate and interface with the intra-building backbone distribution cabling system. In addition, the space can also serve as a horizontal cross-connect location, providing telecommunications services to the floor on which the ER is located. This is also the location of the entrance protectors for outside plant cables should the space also serve as an entrance facility.

The demarcation point is where the cabling responsibility of the Service Provider (regulated telephone company) ends and where the cabling and equipment responsibility of the University's Network and Telecommunications Services group (TNS) begins.

**NOTE: The University has three demarcation points where regulated service providers enter campus (Waterman, Southwick and Trinity Mann Hall Buildings). Off site locations are handled on a case by case basis. Contact the TNS when applicable.**

The ER may also operate as an intermediate cross connect (IC). Thus, the space may include terminations for the riser cable system feeding the floor and the terminations for the horizontal cabling/cross connects that distribute to the work areas on the floor. In addition to cable terminations and cross connects, these rooms may in some cases serve as an equipment room for data, video and other equipment.

The ER rooms are not to be shared facilities for other services and therefore should not house electrical equipment, plumbing, janitor sinks, or to be used as a storage area. Other utilities such as HVAC duct work, electrical conduits, sprinkler system piping, drain pipes, steam pipes, chilled water pipes, or any other building systems not providing direct service to the space, shall not pass through the interior of the room. Any other conceived use for the telecommunications rooms that does not coincide with the intended use of space is not permitted.

## B. SPACE REQUIREMENTS

### 1. Space Requirements for Equipment Rooms

A) Determine number of work areas (WAs) by dividing usable floor space by 100 $ft^2$.

B) Divide total amount of floor space by 250 $ft^2$ to determine number of building automation system (BAS) devices to be served.

C) Multiply number of WAs by (0.75 $ft^2$) and the number of BAS devices by (0.25 $ft^2$) to determine equipment room size.

## C. GENERAL REQUIREMENTS

1. All work shall comply with the National Electric Code, Local Building Codes, and University's TNS standards. In addition, both the design and construction of equipment rooms shall follow the latest guidelines as developed by the Building Industry Consulting Services International (BICSI).

## D. LOCATING OF EQUIPMENT

### 1. Equipment Rooms

A) Equipment rooms shall be positioned to minimize size and length of the backbone cables, such as the center of a large single-floor building or mid-level of a multi-story building. The Equipment room shall be located to allow for convenient access for delivery of equipment over the life of the space. Do not locate equipment rooms in locations that may be subject to water infiltration, steam infiltration, humidity from nearby water or steam systems, heat or another other corrosive atmospheric or adverse environmental conditions.

## E. ROOM LAYOUT

### 1. The ER's shall be laid out to allow for proper use of space using the following considerations:

A) All Outside Plant (OSP) conduits that may enter directly into an ER shall be located on one wall, preferably starting in the left-hand corner inside the door. If it is not possible to locate in the left-hand corner inside the door, conduits shall be installed beginning in a corner of the room. Avoid installing the OSP conduits or riser sleeves in the middle of the backboard area.

B) It is recommended that the intra-building backbone riser sleeves be placed directly above the OSP conduits in the TR and in the same location in each stacked TR room so straight pulls can be made from the floor sleeves to the ceiling sleeves.

C) Horizontal conduits shall enter on another wall and other services shall be properly distributed along the remaining walls. Any questions about room layout should be directed to the University's Telecommunications and Network Services design professional.

D) Avoid mixing entrance, riser and horizontal conduits.

## F. WORKING CLEARANCES

### 1. Equipment Installations

A) For equipment installations, the National Electric Code (NEC) provides requirements for working space clearances around electrical equipment. Generally a three (3) foot working clearance is required around equipment with exposed (unguarded, uninsulated) live parts.

### 2. Floor Standing Racks

A) When floor-standing racks, frames or bays are used, locate racks, frames or bays so that electrical and telecommunications cable routing can be done efficiently from either under floor or overhead distribution systems. Floor layouts for racks, frames, and bays are typically divided into rows. Equipment racks or cabinets should be provided in an equipment room. Allocate a space of at least 32 inches wide, 32 inches deep and 7.5 feet high for each equipment rack or cabinet. Provide space for an aisle of at least 36 inches wide in the front and in the rear of each equipment rack or cabinet.

## G. CABLE PATHWAYS

### 1. Cable Pathways

A) Cable Pathways within the equipment room shall be provided either from overhead cable trays or access floor systems. Should overhead cable tray be used, install trays overhead along the equipment rows, leading to the cross-connects. Coordinate tray locations with lighting, air handling systems, and fire extinguishing systems.

Maintain a 4-inch clearance from each wall. If access floor systems are employed, the use of appropriately sized wire mesh cable trays shall be placed under floor to route cables around the space, as they provide additional means for cable management and protection. The TNS shall direct which pathway system shall be installed in any particular equipment room.

2. Sleeves/slots

A) Sleeves/slots shall be required to provide access into the room. The size and quantity of either the floor or wall penetrations shall be based on the type and quantity of cables to be passing though the barrier. At a minimum, four (4), (4 trade size) pathways shall be provided.

## H. EQUIPMENT ROOM REQUIREMENTS

1. Ceiling Height

A) The rooms shall not have a suspended ceiling. The ceiling finish shall be light in color, and minimize dust. The minimum ceiling height shall be 8 feet 6 inches. Preferred ceiling height is 9 feet 6 inches, allowing cable tray to be mounted greater than 8 feet above finished floor with adequate top access to tray. Ceiling protrusions (fire protection heads) must be placed to assure a minimum clear height of eight (8) feet, to provide space above the equipment racks and cabinets for cables and suspended tray systems. Exception would be a space that has exposed fire proofing sprayed onto the bottom side of the deck above. In this case a drop ceiling is required to protect telecommunications equipment from falling particles created by the fire proofing materials.

2. Doors

A) Doors shall be designed to fully open (180-degrees is recommended), lockable and a minimum of (36-inches) wide and (80-inches) tall. If the space is designed with a double door, eliminate center post. No door sills shall be installed as they impede equipment movement. All doors shall be keyed alike; locksets shall be a self-locking type function. The TNS shall provide key numbering information and approve in writing all issuances.

B) Doors shall open outward unless prohibited by local building codes. If the doors need to swing inward to be code compliant, three (3) feet of usable wall space has been eliminated. Therefore room size shall be increased to compensate for lost mounting area.

3. Floors

**A)** Floor loading shall be greater than (100 lbf/ft$^2$ under distributed loading) and rated for concentrated load of greater than (2000 lbf) in area that will support telecommunications equipment. However, actual floor loads shall be determined by the equipment to be housed within the space. To minimize dust and static electricity, floors shall be shall be a raised access floor system, grounded and bonded in the TMGB. **Carpet is prohibited.**

4. Walls

A) Walls shall be treated to minimize dust. All walls shall be finished (i.e. sheetrock/painted). Fire rated AC plywood backboards, ¾ inch thick, 8 feet high by 4 foot wide shall be mechanically fastened to each wall in the space in a manner that will support the weight of all cables, terminals and equipment that may be affixed to the backboard. Plywood shall be installed with smooth side facing out. Plywood shall be mounted with flush hardware and supports. Strength and placement of supports shall be sufficient to accommodate anticipated load (static and dynamic) of cable and hardware. Paint all plywood with two coats of fire proof paint, white in color. **Do not obscure fire rated stamp on plywood**. Plywood shall cover the entire length of each wall of the space, extending from floor to ceiling. When plywood backboards needs to be attached to concrete walls, a ½-inch wood strapping shall be mounted to the concrete wall between the concrete and the plywood backboard at 2-ft. on center intervals. Plywood backboards shall be mounted to the strapping as opposed to directly to the concrete.

5. Drainage

A) Equipment rooms shall not have floor drains to avoid the threat of back flooding. The rooms shall not be located in any area that may be exposed to flooding.

6. Dust Elimination

A) The walls and ceilings of all equipment rooms shall be dust free and painted with a light color latex paint.

7. Fire Protection

A) Because of the critical nature of the electronics that are housed in this space, fire protection shall come in the form of a chemical suppression system. This chemical system shall be a FM-200 non-ozone depleting fire suppression system. The designer of this system shall conform to all applicable local building and fire codes. Unless required by local building and fire codes, it is the University's intent to not install any form of water based (sprinkled, or pre-action) fire suppression system in equipment rooms. Typically smoke detectors are used to sense the presence of a fire in the protected space, which sends a signal to the detection and control panels resulting in the release of the chemical agent in the protected area.

I. ENVIRONMENTAL CONTROL

1. Equipment Rooms

A) All equipment rooms shall maintain continuous and dedicated environmental control (24 hours per day, 365 days per year). Emergency generator power is required, and must be sized to accommodate the HVC system that serves the room. Maintain positive pressure with a minimum of one air change per hour. Room environment shall be maintained at a temperature range of 64 to 75 degrees Fahrenheit, with a humidity range of between 35 and 60 percent. Switches or thermostats shall be mounted in close proximity to the entrance door. In instances where the entrance door opens into the space, switches or thermostats shall not be located behind the door when the door is in the open position.

2. HVAC System

A) For the HVAC system, provide a stand-alone HVAC unit(s) with independent controls. Maintain positive air pressure differential with respect to surrounding areas. Room environment shall be maintained at a temperature range of 64 to 75 degrees Fahrenheit, with a humidity range of between 35 and 60 percent. Heat dissipation requirements are 7000 BTU's per hour per cabinet.

B) The HVAC system shall be connected to an appropriately sized emergency generator.

3. Backup Up Battery Systems

A) If backup up battery systems are placed in the space, a minimum of four (4) changes of room air volume is recommended per hour.

4. No plumbing, HVAC, or electrical conduit shall pass through, or be directly above the space. In any project where new Equipment Rooms are created, all overhead utilities shall be located out of the space.

J. POWER REQUIREMENTS

1. Electrical Equipment

A) Under no circumstances shall electrical equipment (electrical panels, transformers) or any other utility panels be located in any new equipment room. The only electrical panel allowed in the space would be the electrical panel serving the telecommunications equipment. This scenario is preferable.

2. Multiple, Quadplex and AC outlets

A) Multiple, Quadplex and AC outlets must be provided to power telecommunications equipment, a minimum of two per wall, with the center of the backbox located 18 inches above the finished floor. Each outlet shall be a 20 Amp dedicated unit. Outlets may be surface mounted to the plywood backboard. Receptacles must not be controlled by wall switches. The electrical contractor shall route the conduit for powering the outlet from the corner of the wall that the receptacle(s) are to be mounted onto. The conduit shall route vertically down the wall in the corner of the room and then travel horizontally to the receptacle locations at a distance of no greater than 24-inches above the finished floor. In no circumstances shall the electrical conduit be placed in a manner that obstructs or divides the backboard thus restricting the usable backboard space for the mounting of telecommunications equipment. Typically, the mounting space for telecommunications equipment begins 36-inches above the finished floor and comprises the entire width of the backboard to the ceiling elevation.

B) In rooms where floor mounted equipment racks are installed, mounted to cable tray, above each rack, place two (2) 20 amp twist-lock receptacles. Wire one receptacle to normal power and the other to emergency power at each rack location. Each overhead receptacle shall be placed on a separate branch circuit.

C) All circuits shall be connected to an emergency generator when available.

D) Each room shall contain separate 120 volt AC duplex convenience outlets. Outlets shall be placed at six (6) foot intervals around the perimeter walls. Height of outlets shall be 18 inches AFF.

3. Power Conditioning

A) The sensitivity of telecommunications equipment to power fluctuations is a significant issue in assuring system reliability and longevity. The University requires an isolation transformer to be installed and operational prior to telecommunications equipment being installed.

4. Backup Power

A) Because of the “mission critical” nature of the equipment room, backup power shall be provided by the standby power (i.e. a generator). If batteries are required for backup systems, manufacturer requirements for ventilation, explosion, containment and other safety concerns are to be followed.

5. Grounding

A) Reference section 27800 for further details regarding the building grounding riser. A resistance of .001 ohm or less indicates a high-quality junction per BICSI standards.

6. Lighting

**A)** Lighting shall be open 2’x4’ fluorescent and provide a minimum equivalent of 500 lux (50 foot-candles) 36-inches AFF/ (70 foot-candles) 3.3 meters AFF. Dimmer switches are prohibited. Locate light fixtures a minimum of 8 feet, 6 inches AFF. Location of light fixtures shall be closely coordinated with overhead cable tray and equipment rack placement. The room finishes shall be light-colored to enhance room lighting. Switches for lights shall be mounted in close proximity to entrance door. In instances where the entrance door opens into the space, light switches shall not be located behind the door when the door is in the open position. **Coordinate with TNS for design and layout.**

## III. INTRA-BUILDING BACKBONE RISER CONDUIT SYSTEM

### A. BACKBONE TELECOMMUNICATIONS CONDUIT RISER SYSTEM

1. A backbone telecommunications conduit riser system shall be provided for routing copper and fiber optic backbone cabling from the ER to the telecommunications rooms (TR) located throughout a building. In cases where the ER is located directly below the TR, the use of an appropriate quantity of 4-inch sleeves as indicated in section 27110 should be deployed. In instances where the ER location is offset from the riser stack (i.e. TRs), then the use of either 4-inch EMT conduit or a suitably sized cable tray is required between the ER and the riser stack to

provide support and physical protection of the backbone cables. The TNS shall determine the appropriate type of pathway to be used for each installation.

2. All conduits carrying fiber optic cable shall be compartmentalized into channels via the placement of three (3) 1 1/4” riser rated innerducts.

**END OF SECTION**

# SECTION 27125

# CUSTOMER PREMISES EQUIPMENT (cpe) ROOMS

## I. GENERAL

A. DEFINITION

1. Customer Premises Equipment (CPE) rooms may be required for projects associated with new building construction as well as building renovation projects. If required, these spaces house private departmental/customer owned equipment, such as computer technology equipment and server equipment. These spaces shall be located contiguous to either the Equipment Room (ER) space for the building or the telecommunications room (TR) space associated with a single floor of the structure.

2. In cases where the CPE space cannot be constructed adjacent to the ER in a building or an associated TR, the two spaces shall be connected with a series of 4-inch conduits. When the CPE space cannot be located adjacent to either the ER or TR, room designs and connectivity infrastructure must be approved by the Telecommunications and Network Services group (TNS). The space needs to be positioned so that the maximum horizontal cable lengths do not exceed 295 feet.

B. SPACE REQUIREMENTS

1. Space Requirements for CPE rooms

   A) The minimum space requirements for a CPE room located adjacent to an ER or TR shall be 64 square feet (8' x 8'). For a CPE room that is offset from the ER or TR, the minimum space requirement is 24 square feet (6' x 4'). Each installation requires prior approval of the proposed room design by the TNS, as each installation may have specific needs based on building size and projected usage.

2. Work Clearances

   A) The NEC Section 110-16 provides requirements for working space and clearance around electrical equipment that is exposed (i.e. unguarded, uninsulated). Per NEC allow a minimum of 1 meter (3.3 ft) of clear working space from equipment and the wall where wall mounted cross-connect fields are being mounted when determining the size of the room.

C. ROOM LAYOUT

1. Conduits entering the CPE room shall extend to the Plywood backboard or approximately 8 1/2 feet above the finished floor. Cable Trays located within the ceiling space of the room should never be below 8 feet from the finished floor. Conduits and cable tray shall be rigidly installed to the deck above or side walls, or a combination thereof.

2. For specific CPE room layout the design professional shall consult with the TNS at inception of the project.

3. Relay Racks are typically installed in CPE rooms for the termination of horizontal data cabling, fiber optics and LAN and other equipment. The installation is typically made by the TNS.

## II. GENERAL REQUIREMENTS

A. ALL WORK SHALL COMPLY WITH THE NATIONAL ELECTRIC CODE, LOCAL BUILDING CODES, AND UNIVERSITY OF VERMONT'S TELECOMMUNICATIONS AND NETWORK SERVICES STANDARDS. IN ADDITION, BOTH THE DESIGN

AND CONSTRUCTION OF CPE ROOMS SHALL FOLLOW THE LATEST GUIDELINES AS DEVELOPED BY THE BUILDING INDUSTRY CONSULTING SERVICES INTERNATIONAL (BICSI).

B. ALL CPE ROOMS SHALL BE EQUIPPED WITH A SMOKE DETECTOR CONNECTED TO THE BUILDING FIRE ALARM PANEL. IF SPRINKLER HEADS ARE PROVIDED, INSTALL WIRE CAGES TO PREVENT ACCIDENTAL OPERATION.

C. AN APPROVED FIRE EXTINGUISHER MUST BE PROVIDED JUST INSIDE THE DOOR OF THE EACH ROOM.

D. ELECTRICAL DISTRIBUTION PANELS ARE STRICTLY PROHIBITED IN ANY NEW CPE ROOMS.

E. A MINIMUM OF A 50 PERCENT GROWTH FACTOR SHALL BE BUILT IN AND PROVIDED IN THE CABLE PATHWAYS ALLOCATED FOR EACH RISER STACK, UNLESS OTHERWISE SPECIFIED. AS A RESULT, ANY CABLE OR CONDUIT WORK THAT PERTAINS TO TELECOMMUNICATIONS MUST BE DESIGNED AND/OR APPROVED BY THE TNS.

## III. CUSTOMER PREMISES EQUIPMENT ROOM REQUIREMENTS

A. CEILING HEIGHT

1. The rooms shall not have a suspended ceiling. The minimum ceiling height shall be 8 feet 6 inches. Preferred ceiling height is 9 feet 6 inches, allowing cable tray to be mounted greater than 8 feet above finished floor with adequate top access to tray.

B. DOORS

1. Doors shall be designed to fully open (180-degrees is recommended), lockable and a minimum of (36-inches) wide and (80-inches) tall. If the space is designed with a double door, eliminate center post. No door sills shall be installed as they impede equipment movement. All doors shall be keyed alike; locksets shall be a self-locking type function. The TNS shall provide key numbering information and approve in writing all issuances.

2. Doors shall open outward unless prohibited by local building codes. If the doors need to swing inward to be code compliant, three (3) feet of usable wall space has been eliminated. Therefore room size shall be increased to compensate for lost mounting area.

3. The door is to be keyed by the University's key bank for the TNS equipment room key. In special applications where a Telecommunications Terminal Cabinet (Box) is used, the box installed shall be capable of being locked. Personal entry to a locked panel shall be via an UVM key bank key for the TNS.

C. FLOORS

1. Floor loading shall be greater than (100 lbf/ft$^2$ under distributed loading) and rated for concentrated load of greater than (2000 lbf) in area that will support telecommunications equipment. However, actual floor loads shall be determined by the equipment to be housed within the space. To minimize dust and static electricity, floors shall be shall be a raised access floor system, grounded and bonded in the TMGB. Carpet is prohibited.

D. CABLE PATHWAYS

1. All conduits and cable trays connecting the ER or TR rooms to a CPE room shall enter on the same wall that the plywood was attached and extend up or down to the edge of the backboard. The CPE should be connected to the serving ER or TR with a minimum of one 4 inch conduit. Conduits are to be clamped to the wall so that they will support the pulling of cable and be bonded to the Telecommunications ground.

2. Conduits shall be dressed even, reamed, cleaned, bushings and pull cord installed. The pull cord shall be capable of 200 lbs of pull strength.

3. Conduits entering from the floor shall extend 3 inches above finished floor. For conduits entering from the ceiling or walls the conduits should be installed to turn down and extend to 8 feet 6 inches above finished floor in the space. All

conduits shall be dressed at the same level and installed with rigid conduit straps to the wall. In any instance where any of the above requirements cannot be met because of structural or other considerations, immediately contact the TNS.

E. CABLE TRAY

1. Cable trays shall loop the entire perimeter of the room. Maintain a 4-inch clearance from each wall. Refer to section 27130 for further cable tray requirements. In addition, in locations were floor-mounted equipment racks are located in the space, sections of cable tray shall be installed above the racks to facilitate cable routing to these locations.

F. WALLS

1. Walls shall be treated to minimize dust. All walls shall be finished (i.e. sheetrock/painted). Fire rated AC plywood backboards, ¾ inch thick, 8 feet high by 4 foot wide shall be mechanically fastened to each wall in the space in a manner that will support the weight of all cables, terminals and equipment that may be affixed to the backboard. Plywood shall be installed with smooth side facing out. Plywood shall be mounted with flush hardware and supports. Strength and placement of supports shall be sufficient to accommodate anticipated load (static and dynamic) of cable and hardware. Paint all plywood with two coats of fire proof paint, white in color. Do not obscure fire rated stamp on plywood. Plywood shall cover the entire length of each wall of the space, extending from floor to ceiling. When plywood backboards needs to be attached to concrete walls, a ½-inch wood strapping shall be mounted to the concrete wall between the concrete and the plywood backboard at 2-ft. on center intervals. Plywood backboards shall be mounted to the strapping as opposed to directly to the concrete.

G. DRAINAGE

1. CPE rooms will not have floor drains to avoid the threat of back flooding. The rooms shall not be located in any area that may have an exposure to flooding.

H. DUST ELIMINATION

1. The walls and ceilings of all equipment rooms shall be dust free and painted with a light color latex paint.

I. FIRE PROTECTION

1. Because of the critical nature of the electronics that are housed in this space, fire protection shall come in the form of a chemical suppression system. This chemical system shall be a FM-200 non-ozone depleting fire suppression system. The designer of this system shall conform to all applicable local building and fire codes. Unless required by local building and fire codes, it is the University's intent to not install any form of water based (sprinkled, or pre-action) fire suppression system in equipment rooms. Typically smoke detectors are used to sense the presence of a fire in the protected space, which sends a signal to the detection and control panels resulting in the release of the chemical agent in the protected area.

J. RFI / EMI RESTRICTIONS

1. Due to RFI and EMI, the CPE rooms shall not house any electrical equipment (i.e. - step down or step up transformers, breaker panels, etc). The space shall be in a location where electromagnetic interference is minimal.

K. ENVIRONMENTAL CONTROL

A) All CPE rooms shall maintain continuous and dedicated environmental control (24 hours per day, 365 days per year). Emergency generator power is required, and must be sized to accommodate to accommodate the HVC system that serves the room. Maintain positive pressure with a minimum of one air change per hour. Room environment shall be maintained at a temperature range of 64 to 75 degrees Fahrenheit, with a humidity range of between 35 and 60 percent. Switches or thermostats shall be mounted in close proximity to the entrance door. In instances where entrance door opens into the space, switches or thermostats shall not be located behind the door when the door is in the open position.

B) No plumbing, HVAC, or electrical conduit shall pass through, or be directly above the space. In any project where new CPE rooms are created, all overhead utilities shall be relocated out of the space.

## L. POWER REQUIREMENTS

1. Electrical Equipment

   A) Under no circumstances shall electrical equipment (electrical panels, transformers) or any other utility panels be located in any new equipment room. The only electrical panel allowed in the space would be the electrical panel serving the telecommunications equipment. This scenario is preferable.

2. Multiple, Quadplex and AC outlets

   A) Multiple, Quadplex and AC outlets must be provided to power telecommunications equipment, a minimum of two per wall, with the center of the backbox located 18 inches above the finished floor. Each outlet shall be a 20 Amp dedicated unit. Outlets may be surface mounted to the plywood backboard. Receptacles must not be controlled by wall switches. The electrical contractor shall route the conduit for powering the outlet from the corner of the wall that the receptacle(s) are to be mounted onto. The conduit shall route vertically down the wall in the corner of the room and then travel horizontally to the receptacle locations at a distance of no greater than 24-inches above the finished floor. In no circumstances shall the electrical conduit be placed in a manner that obstructs or divides the backboard thus restricting the usable backboard space for the mounting of telecommunications equipment. Typically, the mounting space for telecommunications equipment begins 36-inches above the finished floor and comprises the entire width of the backboard to the ceiling elevation.

   B) Specific additional power circuits maybe required for CPE equipment. Coordinate with provider and NTS for any dedicated power circuits required and acceptable power sources.

   C) In rooms where floor mounted equipment racks are installed, mounted to cable tray, above each rack, place two (2) 20 Amp twist-lock receptacles. Wire one receptacle to normal power and the other to emergency power at each rack location. Each overhead receptacle shall be placed on a separate branch circuit

   D) All circuits shall be connected to an emergency generator when available.

3. Ground Bar

   A) All CPE rooms shall have a ground bar that measures twelve (12) inches long by two (2) inches wide by ¼ inch thick with pre-drilled ¼ inch holes. All conduits terminating to cable trays and wire ways shall be mechanically fastened. If connected to a tray, conduit must be equipped with ground bushings and wire bonded to the tray. The cable tray or wire way shall be grounded to main building grounding system.

   B) A resistance of .001 ohm or less indicates a high-quality junction per BICSI standards. Reference section 27800 for further details regarding the building grounding riser.

4. Lighting

   A) Lighting shall be open 2’x4’ fluorescent and provide a minimum equivalent of 500 lux (50 foot-candles) 36-inches AFF/ (70 foot-candles) 3.3 meters AFF. Dimmer switches are prohibited. Locate light fixtures a minimum of 8 feet 6 inches AFF. Location of fixtures shall be closely coordinated with overhead cable tray and equipment rack placement. The room finishes shall be light-colored to enhance room lighting. Emergency lighting is recommended if available. Switches for lighting shall be mounted in close proximity to the entrance door. In instances where the entrance door opens into the space, switches or thermostats shall not be located behind the door when the door is in an open position.

## M. CABINETS AND TERMINAL BOXES

1. Existing installations, retrofits and smaller single story buildings

A) The implementation of a dedicated CPE room may not be feasible. As opposed to a dedicated CPE room, a locked telecommunications enclosure may be used. Approval by the TNS is required prior to the installation of any enclosures on campus.

2. Telecommunications Enclosures

   A) Contiguous wall space required for enclosure placement is as follows:

| Building Usable Floor Space | TR Wall Length | ER wall Length up to |
|---|---|---|
| </= 30,000 Square Feet | 48 Inches | 90 inches |

3. Terminal boxes shall be a minimum of 36 inches wide, and shall contain within them a mounted ¾" A/C grade plywood backboard for mounting hardware. The plywood shall cover the cabinet, smooth side out. Terminal boxes shall be placed to allow a 36 inch area of clear space to the front side of the enclosure.

4. The wall area for the terminal box should be covered with 3/4 inch thick, A/C grade plywood backboard, 8- foot high and of a width as identified under Section 1.7.B. Plywood shall be affixed in such a manner that it will support the weight of the terminal box, cable, terminals, and other equipment. This allows for coverage of the entire area on which connecting hardware and cable management hardware may be mounted. Smooth side shall be installed out. The plywood backboard shall be void free and treated with two coats of fire retardant materials. Do not obscure fire rating of plywood. Use flush hardware and supports to mount plywood. The strength and placement of mounting hardware shall be. Sufficient to handle the total anticipated load (static and dynamic) and mounting of cabling components.

5. Provide a light intensity of a minimum equivalent of 500 lux (50 foot-candles) 36-inches AFF/(70 foot-candles) 3.3 meters AFF to the front side of the terminal box.

6. Provide a minimum of one dedicated 120 VAC, 20 Amp (non-switchable) quad receptacle on the wall. Locate the receptacle directly below the enclosure and placed a minimum of 15 inches above finished floor. Receptacle shall not be controlled by wall switches. If the building is provided with an emergency generator system or UPS (uninterruptible power supply), the electrical power and light in front of the terminal box shall be supplied from that emergency power source.

7. Location

   A) Telecommunications enclosures shall not be located within fifteen (15) feet of any electrical equipment (transformer, electrical panels) to minimize possible EMI or RFI interference.

   B) A location adjacent to service entrance conduits and conduits serving the ER.

8. All conduits and cable trays shall terminate on the same wall and directly above the plywood to which the locked panel box is attached. Configuration of conduits and cable tray shall follow the same design configuration requirements as the ER and TR rooms.

9. Over-head clearances shall be at least 8 feet, 6 inches for any piping, HVAC duct work, sprinkler heads, etc.

## END OF SECTION

# SECTION 27130
# INTERIOR COMMUNICATIONS PATHWAYS

## I. CONDUIT

### A. GENERAL

1. RELATED SECTIONS

   (A) All conduit work shall meet the specifications of National Electric Code for conduit installations. The installation of all conduits and pull boxes shall fall under the responsibility of the Telecom Contractor; however, the Telecom Contractor shall coordinate also with the Electrical Contractor who will be installing conduit systems under Division 16000 requirements. Refer to Division 16000 specifications for conduit and associated hardware installation requirements and match Division 16000 requirements for all conditions applicable under these Division 27000 requirements.

2) GENERAL REQUIREMENTS

   A) All voice, data and video wiring inside rooms shall be protected by electrical metallic tubing (EMT).

   B) PVC conduit and plastic molding are not acceptable except in caustic environments.

   C) Aluminum is not acceptable for all interior wiring.

   D) EMT conduit shall be used for all interior wiring.

   E) All conduits shall be concealed in the wall wherever possible. No surface mounted conduit will be acceptable except in mechanical rooms. All other applications requiring surface mounted conduit shall utilize surface mounted raceway.

   F) Each workstation outlet box shall be connected to a 1-inch conduit routed directly to the nearest main raceway system (I.E. cable tray) in a homerun fashion. The conduit shall be EMT with set screw or compression fittings. Flex conduit shall not be used in buildings for telecommunications cabling conduits. Vertical conduits designated for outlets shall not feed floor to floor or be daisy chained from outlet to outlet. A ¾-inch conduit is acceptable only for single wall phone outlets.

   G) The total pathway length including pull boxes used for telecommunications systems shall be a maximum of 250 feet.

   H) In the case of conduit terminating at a cable tray, the conduit must be mechanically fastened to the side of the cable tray and the conduit end at the tray must be terminated in a grounding bushing and wire bonded to the tray. A mineralic strap is not acceptable as a means of grounding the conduit to the cable tray.

   I) In the case of metallic conduit terminating in the telecommunications room, the conduit must be terminated using a grounding bushing and wire bonded to the room ground bar.

   J) All conduit cast in the floor slab shall be a minimum of 1 1/4"inch schedule 40 PVC.

   K) In major renovations and new construction projects, the contract shall include provisions for installation of four (4) riser conduits (4 trade size) from the equipment room/main cross-connect location to each telecommunications room/intermediate cross-connect location. A pull string (required) and pull boxes (as required) shall be provided in each conduit run to facilitate future installation of cables.

### B. PRODUCTS

1. For telecommunications projects that do not have an associated division 16000 specifications, the following shall apply:

   A) RACEWAYS

   B) EMT: ANSI C80.3, zinc-coated steel, with set-screw or compression fittings.

C) FMC: Zinc-coated steel.

D) IMC: ANSI C80.6, zinc-coated steel, with threaded fittings.

E) RACEWAY FITTINGS: Specifically designed for the raceway type with which used.

## C. EXECUTION

### 1. SITE CONDITIONS

A) Examine the Drawings of all trades and all specification Sections, survey the existing conditions, and include all necessary allowances in bid proposal.

B) Resolve all conflicts with code requirements, site conditions and the work of other trades.

### 2. SPECIAL CONDITIONS

A) Use of "LB" style 90˚ conduit bends shall not be allowed for any Division 27000 installations, regardless of allowed use in Division 16000 specifications.

B) All changes in conduit routing direction for telecommunications cables shall be made using wide sweep sizes in all locations, sized per ANSI/TIA/EIA-569-A standards. Any conduit with an internal diameter of 2-inches or less shall have a bend radius of at least (6) times the internal conduit diameter, and any conduit with a diameter of greater than 2-inches shall have a bend radius of at least (10) times the internal conduit diameter.

(1) Where field conditions prohibit the use of the minimum bend radii indicated above; for conduits of 2-inches or greater in diameter, the preferred minimum bend radius is 30-inches. However, in no case shall any bend radii for a conduit having an internal diameter of more than 2-inches, measure less than 16-inches. In each instance where a conduit bend radii cannot meet industry standards, the contractor must obtain written approval from the Telecommunications and Network Services (TNS) group. Field and machine bent radii are acceptable.

C) There should be no continuous sections of conduit greater than 100 feet. For sections of conduit that must route greater than 100 feet, pull boxes shall be installed in the conduit run so that no segment between pull boxes is greater than 100 feet.

D) Pull boxes shall be sized in accordance with the following matrix:

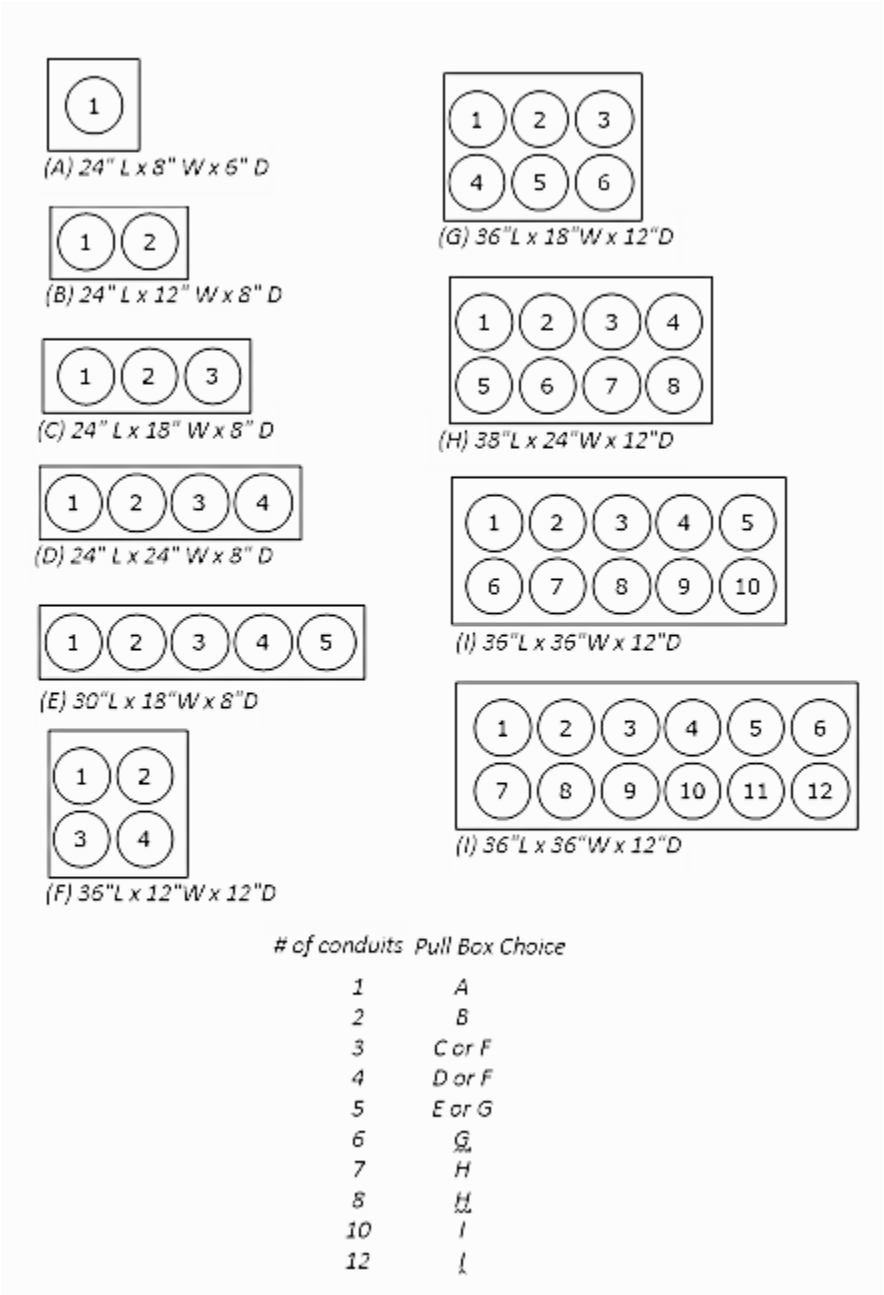


| # of conduits | Pull Box Choice |
|---|---|
| 1 | A |
| 2 | B |
| 3 | C or F |
| 4 | D or F |
| 5 | E or G |
| 6 | G |
| 7 | H |
| 8 | H |
| 10 | I |
| 12 | I |

E) Four (4) inch square outlet boxes shall not be considered for pull-boxes under any circumstances. Pull Boxes are not to be used for termination or splice boxes under any circumstances. Install pull boxes in easily accessible locations, preferably above suspended ceiling. Pull boxes shall be positioned vertically and horizontally so they can be accessed with an 8-foot step ladder.

**F)** In the case of hardcoat ceilings, an access panel shall be installed in the ceiling directly beneath any pull boxes. The opening shall be sized at a minimum of 24" x 24" to accommodate reasonable access. Pull Boxes should be provided with a suitable hinged panel or cover arranged for access from the bottom. Conduits should be arranged to allow a straight pull through the box with no bends. Do not use a pull box in lieu of a bend. Telecom Pull boxes shall not be used by other utilities. **NOTE: Designs that require pull boxes be mounted more than 10 feet above the finished floor shall first be approved by TNS.**

G) No more than an equivalent of 180 degrees of bend, (2-90 degree bends) including offsets, is allowed in a conduit run between pull boxes. Should a conduit run require more than 180 degrees in bends, provide a pull box between sections with two bends or less. The following indicate situations where a third 90 degree bend may be acceptable in a pull section without de-rating the conduit's capacity:

(1) The run cannot be longer than 33 feet.

(2) The conduit size is increased to the next trade size.

(3) One of the bends is located within 12 inches of the end of the cable feed end.

H) In all cases, prior written approval by the TNS is required, before the installation of a third 90 degree bend in any conduit run.

I) All EMT fittings shall be either set screw or compression type.

J) Every conduit, innerduct, or enclosed pathway, with or without cables, installed under Division 27000 shall have a nylon pull cord installed with a minimum test rating of (200 LBS) installed along with the required communications cables.

K) All conduits that end in free space as transition points to cable tray or wire-mesh tray systems shall have bell-end bushings installed.

L) After installation, all conduits shall be verified as being clean, dry, unobstructed, labeled for identification, as well as reamed and fitted with bushings prior to acceptance by the TNS.

3. CONDUIT CAPACITY

A) No conduit run, regardless of diameter, shall be designed to exceed 50 percent cable fill capacity. For calculation purposes it should be assumed that each telecommunications drop at the work station feeding through a 1-inch diameter conduit will require a minimum of four (4) category 6 cables.

4. CONDUIT RESPONSIBILITY

A) Coordinate the installation of conduit with the schedules for work of other trades to prevent delays in total work. Assume responsibility for any cooperative work, which must be altered due to lack of proper supervision or failure to make proper provision in time. Perform alterations to Construction Manager's satisfaction, and pay all costs.

B) Resolve any code conflicts with Electrical Contractor prior to installation.

5. CONDUIT FIRESTOPPING

A) Penetrations through firewalls must include the appropriate size sleeve and be fire stopped. Where new horizontal pathways are required to penetrate rated walls, sleeves shall be installed to maintain fire rating of wall. If existing sleeves are filled, install additional sleeves.

6. EMI CONSIDERATIONS

A) Conduit and raceway systems for telecom infrastructure cabling shall be routed to avoid all sources of EMI or ambient electrical noise whenever possible. Minimum distances from EMI sources are as follows:

(1) Five (5) inches from unshielded power lines of <2 KVA.

(2) Twelve (12) inches from unshielded power lines of 2 to 5 KVA.

(3) Twenty-four (24) inches from unshielded power lines of >5 KVA.

(4) No cable runs should be parallel with unshielded AC lines.

(5) Twelve (12) inches from high voltage or ballasted lighting, including fluorescent and HID sources

(6) Forty (40) inches from transformers and electric motors

## II. CABLE TRAY

A. GENERAL

1. GENERAL REQUIREMENTS

   A) Ceiling raceways (Cable Tray) systems are the preferred method of horizontal transport at the University. All cable trays shall be designed to accommodate all communications cabling (low-voltage) and there selection, design and installation methods must be approved by the Telecommunications and Network Services (TNS) during the initial design phase of a project. In no instances shall power cabling be located in any telecommunicationsraceway.

   B) Cable runway and cable tray are all employed to carry bulk volumes of cable vertically or horizontally in backbone and horizontal cabling applications where conduit can be avoided, thereby reducing project costs. Cable tray systems, including flex tray, shall be used for horizontal cable management and backbone cable installations where large cable counts occur. At all locations were a transition occurs in the width of the tray, whether it be a “cross”, “Y” or a change in tray sizes, the contractor is to create through standard fittings or field fabrication (Depending of Pathway System Specified), a smooth transition for the cables to flow from one tray size to another. No abrupt transitions are to be deployed. All cable trays shall be designed to accommodate all telecommunications cabling and must be approved by the TNS during the initial design phases of project.

   C) Used or refurbished cable tray shall not be used in new telecommunications installations.

B. PRODUCTS

NOT USED

C. EXECUTION

1. SITE CONDITIONS

   A) Examine the Drawings of all trades and all specification Sections, survey the existing conditions, and include all necessary allowances in bid proposal.

   B) Resolve all conflicts with code requirements, site conditions and the work of other trades.

2. SPECIAL CONDITIONS

   A) The minimum dimensions for a cable tray shall be 12 inches wide by 4 inches deep.

   B) Consideration may be given for installation of other types of cables in a cable tray as long as these other cables do not introduce interference onto the unshielded telecom. cables. Locations of such installation shall be approved by the TNS. In addition, the cable tray shall be installed to avoid all real or potential electromagnetic interference issues to the unshielded cable.

   C) Cable trays must be a minimum of three (3) inches of clear vertical space above the ceiling tiles and support channels (T-bars) to ensure accessibility, and a minimum of eight (8) feet above the finished floor. Cable trays will be the first utility above the ceiling.

   D) Install sweeping 90’s for all turns. Use end-of-tray terminations or waterfalls where wire drops down out of the tray to prevent abrasions and cuts from metal tray edges.

3. INSTALLATION

   A) Deliver materials to the site in standard lengths, and store where continuously protected from moisture and weather.

   B) Cable tray shall be assembled as specified by the manufacturer, including using manufacturer-approved clamps, angles, brackets, clips, and assemblies; routing shall be level and square; and creating an overall professional appearance. Cable tray shall be supported at intervals of a minimum of 5 ft. Supports should be located where practicable so that connections between sections of the tray fall between the support point and the quarter section of the span. A support should be placed within 2 ft. on each side of any connection to a fitting. All horizontal cable support should be grounded in accordance with manufacturer specifications.

C) Cable tray supports should be located where practicable so that connections between sections of the tray fall between the support point and ¼ the distance of the span. A support should be placed within 600mm (2 ft.) on each side of any connection to a fitting. The support span for cable tray and cable tray should be determined in accordance with the manufacturer's maximum load capacity of the system on that span but in no case shall exceed six feet between supports. Cable trays and cable tray may be supported by three basic methods: cantilever brackets from a wall, trapeze, or individual rod supports from the ceiling (2 rods at each location). Trapeze or individual rod supports shall be fastened to ceiling anchors and from properly sized allthread rod. No bends shall be allowed in the allthread.

D) All cable tray configurations and equipment, shall be compliant with Uniform Building Code, ANSI-T1E1, and Telcordia NEBS standards compliant regarding seismic activity. This site is within a Seismic Zone 2 rating.

E) The inside of the cable tray shall be free of burrs, sharp edges, or projections that can damage cable insulation. Abrasive supports (e.g., threaded rod) shall have the portion within the tray and extending for a minimum of 6 inches above the top of the tray protected with a smooth, non-scratching covering so that cable can be pulled without physical damage (such as a PVC conduit sleeve covering).

F) When a cable tray passes through a non-fire rated partition or wall, it shall be an unbroken length. For fire-rated walls, the cable tray does not pass through the wall, but terminates on each side. For locations where cable tray must pass through fire rated assemblies, a sleeved opening shall be made through the fire rated assembly and the cable tray shall come up to, but not through, the sleeved opening. Use of firestopping "pillows" shall be used for sealing the opening after cables have been placed. Refer to Section 27170 for details regarding firestopping requirements.

G) Contract documents shall show cross section of the communications wire way or cable tray. When sufficient space is available, a minimum of 300mm (12 in.) access headroom shall be provided and maintained above a cable tray, however, in all cases a minimum of 8 inches of clear space above the cable tray shall be maintained.

H) Care shall be taken to ensure that other building components (e.g., air conditioning ducts) do not restrict access to trays, or shall any structures run directly through the cable tray system, such as sprinkler heads or ductwork. A minimum of 24 inches is required along one side of the tray to allow access from below the tray. In no case shall the tray be closer than eighteen (18) inches from the structural ceiling, ducts or pipes, considering all other possible obstructions. A minimum of one (1) foot distance from lighting, especially fluorescent lighting is required. A single threaded rod support is not acceptable.

I) Trays within the ceiling shall protrude into the closet, provided wall is not a fire rated assembly, a distance of 1-3 in. before any bends, and shall be located above the 8-ft level.

J) Cable tray shall be positioned vertically and horizontally above the ceiling so it is accessible with an 8-foot step ladder.

## III. ZONED CONDUIT SYSTEM

### A. GENERAL

#### 1. GENERAL REQUIREMENTS

A) The design of a zoned conduit system must be approved by the TNS.

## IV. MISCELLANEOUS DISTRIBUTION SYSTEMS

### A. GENERAL

#### 1. GENERAL REQUIREMENTS

A) Depending on the type building and construction materials, there are other methods of distribution that may be used.

(1) Perimeter Distribution/Wire Mold - A raceway system may be used for perimeter distribution. The raceway system can be mounted at desk height or can be recessed into the base of the wall to form a baseboard.

(2) Open Wiring - Open wiring may be used in wood frame construction in wall, ceiling, and floor cavities.

(3) Conduits run in slabs or other concrete structures shall be PVC Schedule 40. The minimum size for horizontal cabling is one (1) inch. All in floor/slab installations must be approved by the TNS.

## END OF SECTION

# SECTION 27150

# BACKBONE CABLING

## I. CABLING

### A. GENERAL

1. GENERAL REQUIREMENTS

   A) A 50 percent growth factor shall be built in and provided for unless otherwise specified. Consequently, any cable work that pertains to telecommunications must be designed and/or approved by the Telecommunications and Network Services (TNS).

   B) All communications wiring must be run in conduit, cable trays or wireways.

   C) Cable shall be plenum rated.

   D) To facilitate future cable installations, a new pull string, tied off at both ends, shall be installed in conduit, innerduct, etc. simultaneously with the pulling of cable. In general, all communications wiring shall be designed or approved by the TNS.

   E) The Contractor shall maintain manufacturer recommendations for bend radii on all cable installations.

## II. VOICE BACKBONE CABLING

### A. GENERAL

1. SYSTEM DESCRIPTION

   A) The Voice-grade cable system is designed to accommodate services with bandwidth of up to 16 MHz, including analog voice services (plain old telephone service (POTS)), 56k digital leased lines, and 128k Basic Rate TNSN (BRI). This cable system is composed of one or more multi-pair 24 AWG 100-ohm unshielded twisted pair (UTP) Category 3 backbone.

   B) All building voice-grade distribution cables originate in the Main Cross-connect (MC), located in the equipment room of the building. Cables leaving the MC are routed directly to one or more evenly dispersed Intermediate Cross-connects (ICs), each typically serving a number of Horizontal Cross-connects (HCs)—a “hierarchical star” distribution. Some ICs also function as the HC to phone services in the immediate area of the IC. To limit the overall system structural return loss and the distance an application must travel from the MC to HC or from one HC to another, the segments or links are limited to no more than two hierarchical levels of cross-connects. Therefore, from the HC, only one cross-connect point can be passed through to reach the MC, and interconnections between any two HCs will pass through three or fewer cross-connects. Larger cables from the MC are segmented into smaller cables at the IC before being distributed to the HCs using an insulation displacement connection block.

### B. PRODUCTS

1. MANUFACTURERS

   A) Krone

### C. MATERIALS

1. As telecommunications hardware technology is constantly evolving, telecommunications consultants and contractors shall inquire with the University's Network and Telecommunications Services Group for an updated list of components and associated part numbers that shall be specified and installed on campus.

D. EXECUTION

1. INSTALLATION

A) Large, multi-pair CMR cables shall be routed from the MC to each IC and shall be segmented via Category 5E-compliant terminal blocks into reduced pair-count cables for distribution to the HCs.

B) The IC shall employ "Interconnect" blocks. All interconnect blocks shall employ the same termination methodology:

(1) All distribution cables routing from the MC shall be terminated on a Krone block as shown in the drawings.

(2) Connecting blocks shall be installed on all terminated positions of the wiring block.

(3) All distribution cables routing from the IC to HCs shall be terminated onto the connecting block as shown in the drawings and this specification.

(4) No form of jumpers shall be installed.

C) Cables shall be terminated at the MC on wall-mounted Krone interconnect blocks. The interconnection point between MC-to-IC cables and IC-to-HC cables shall not include any jumper wire. Each HC shall be provided with a Krone block of the size and capacity to terminate the pair quantity illustrated on the associated riser diagram drawing for a specific project.

D) Cables shall be dressed-in, tie wrapped (Velcro Ties), and secured to the ladder rack, plywood backboard, and/or other suitable surfaces to ensure a professional appearance and run straight and level, with 90° corners where possible. Telecom Contractor must comply with manufacturer's standard pulling tension and minimum bend radii at all times.

E) All positions on all voice-grade frames shall be fully populated with Krone wiring blocks.

F) Inter-building cabling for voice grade telecommunications systems shall be CAT3 rated. Penetrations from the exterior shall not exceed 50 feet without transitioning to interior plenum rated cabling. Protection blocks shall be utilized at all entrance locations. All entrance cables shall have their outer shielding grounded to the TMGB (Refer to Grounding and Bonding requirements).

## III. FIBER OPTIC TECHNOLOGY

A. GENERAL

1. SYSTEM DESCRIPTION

A) Every effort was made to ensure that the information in this document was complete and accurate at the time of printing. However, technology is ever changing, becoming more efficient and effective and is subject to change. All fiber optic planning, installation and specifications shall be approved in advance by the TNS.

B) All backbone fiber optic cabling shall be comprised of either Single-Mode, Multimode cable or a combination of both. All building to building fiber cables (campus inter-building) shall be a minimum of 144 strands of single mode cable. Intra-building backbone fiber optic cable shall be a minimum of 72 stands, 36 single-mode and 36 multi-mode.

C) All multi-mode fiber cables shall 50 micron and specified to accommodate 10 gigabit applications out to 300 meters. All 50 micron multimode connectors shall be black in color at all locations.

D) All Single mode fiber connectors shall be blue in color at all locations.

E) All 250 micron fiber shall be buffered up to 900 micron (in loose tube configuration), by means of loose tube fan-out kit.

F) When installing fiber optic cables in duct banks and maintenance holes between buildings, there shall be a minimum of two complete loops in the maintenance hole.

G) All fiber optic cables shall be terminated with an approved connector and properly connected to the distribution panel utilizing a cable end kit for each cable and an end kit for each tube. In that connector designs are constantly evolving, connector types will be specified by the TNS. Allow 25 inches of slack from the end kit to connector in the same connector housing, and 47 inches if you pass into a second connector housing.

H) When installing intra-building fiber optic cables in conduit, it should be pulled in innerduct, minimum 1" inside diameter, unless otherwise directed by TNS. In instances where fiber is routed in a cable tray or on a runway, it shall be placed in plenum innerduct.

I) All cable placed along runways, relay racks and distribution shelves shall not exceed the manufacturers bend radius requirements for that particular type of cable. When cable is secured by strap or other fasteners they shall not be pulled so tight at any point that they cable cladding is crushed flat or indented. Cable must move back and forth for MIC cable.

J) Jumper or patch cords are to be used to connect different fibers together for continuation of service. Do not wrap a jumper completely around a routing guide or other type bracket. When using routing guides on a relay rack always use the rear portion of the guide to hold vertical jumper runs and the front portion of the guides to hold horizontal jumpers. Always use front routing guide to enter or leave connector housing.

## IV. MULTI MODE FIBER OPTIC BACKBONE CABLING INSTALLATION

### A. GENERAL

1. SYSTEM DESCRIPTION

A) The Multimode Fiber Optic Backbone is designed to accommodate applications up to 1 GHz in bandwidth. (Actual system bandwidth is a function of the fiber bandwidth and performance of the transmitter (wavelength, spectral width, and rise/fall time).) The Fiber Optic Riser is composed of multimode (MMF) optical fiber, with services using either one, two, or four fiber strands. Most MMF applications typically use two strands of fiber.

B) MMF cables are routed from the Main Cross-connect located in the equipment room and to dispersed telecommunications rooms within the building. In compliance with established standards, the segments or links will be limited to no more than two hierarchical levels of cross-connects in this backbone cabling. This flexible, IC-based cross-connect scheme allows services to transition to UTP copper within at each IC or HC location prior to being interconnected to the High Speed Data Cable System, for final distribution to the workstation outlets. MMF will be terminated onto a ST connector at all MC and IC locations.

C) System Topology: The overall physical system is comprised of a double looped architecture; a horizontal backbone, which links the various MC spaces in buildings of the campus; and vertical backbones, which extend from each of the MCs to ICs or HCs within a specific building. The logical operational configuration of the network cabling shall be a hierarchal star, so that no more than two cross-connects occur between the fiber-to-copper switch equipment that serves the individual workstation outlets. The loop topology shall allow for alternate, redundant cable re-configurations in the event that the primary fiber cable has become severed or damaged.

### B. PRODUCTS

1. MANUFACTURERS

A) Corning

2. MATERIALS

A) As telecommunications hardware technology is constantly evolving, telecommunications consultants and contractors shall inquire with the University's Network and Telecommunications Services Group for an updated list of components and associated part numbers that shall be specified and installed on campus.

C. EXECUTION

1. INSTALLATION

A) The Fiber Optic Riser Backbone and horizontal (fiber to the desktop) is comprised of plenum rated, 50/125µm MMF cables.

B) MMF backbone cables are terminated into patch panels at both ends.

C) MMF cables to the desktop are terminated into patch panels in the IC's and wall outlets at the workstations. A 4-strand armored cable shall be installed from the appropriate IC to each workstation locations as indicated on the design drawings.

D) Manufacturer's standard pulling tension and minimum bend radii shall be complied with at all times. Cables shall be dressed-in, tie wrapped (Velcro Ties), and secured to the cable runway, plywood backboard, and/or other suitable surfaces so as to ensure a professional appearance, run straight and level, with 90° corners where possible, bearing in mind manufacturers recommended bend radii.

E) All fiber optic cabling shall be encased plenum rated innerduct at all locations where the fiber cable is not encased in conduit. The exception shall be the 4-strand armored building cables to the desktop. These cables route non-encased in the cable tray pathways. When terminating at a patch panel, bring innerduct to within 6-inches of the patch panel.

## V. SINGLE-MODE FIBER OPTIC BACKBONE CABLING INSTALLATION

A. GENERAL

1. SYSTEM DESCRIPTION

A) The SMF backbone is designed to accommodate applications up to at least 10 GHz in bandwidth; however, theoretical upper limits are estimated to be much higher. The details of this specifications section shall address primarily the single mode fiber backbone.

B) SMF cables leaving the MC and are routed directly to one or more ICs, some of which serve as HCs. In compliance with established standards, the segments or links will be limited to no more than two hierarchical levels of cross-connects in this backbone cabling. Therefore from the HC, only one cross-connect point can be passed through to reach the primary or secondary MC, and interconnections between any two HCs will pass through three or fewer cross-connects. This flexible, IC-based cross-connect scheme allows services to transition to UTP copper within each IC or HC prior to being interconnected to the High Speed Data Cable System, then distributed to the workstation outlets. SMF will be terminated onto a ST connector.

C) System Topology: The overall physical system is comprised of a double looped architecture; a horizontal backbone, which links the various MC spaces in buildings of the campus; and vertical backbones, which extend from each of the MC to an IC or HC within that building. The logical operational configuration of the network cabling shall be a hierarchal star, so that no more than two cross-connects occur between fiber-to-copper switch equipment that serves the individual workstation outlets. The loop topology shall allow for alternate, redundant cable re-configurations in the event that the primary fiber cable has become severed or damaged.

2. PRODUCTS

A) MANUFACTURERS

(1) Corning

B) MATERIALS

C) As telecommunications hardware technology is constantly evolving, telecommunications consultants and contractors shall inquire with the University's Network and Telecommunications Services Group for an updated list of components and associated part numbers that shall be specified and installed on campus.

3. EXECUTION

A) INSTALLATION

(1) SMF cables are terminated into patch panels at both ends.

(2) Manufacturer's standard pulling tension and minimum bend radii shall be complied with at all times. Cables shall be dressed-in, tie wrapped (Velcro Ties), and secured to the cable runway, plywood backboard, and/or other suitable surfaces so as to ensure a professional appearance, run straight and level, with 90° corners where possible, bearing in mind manufacturers recommended bend radii.

(3) All fiber optic cabling shall be encased in plenum rated innerduct at all locations where the fiber cable is not encased in conduit. When terminating at a patch panel, bring innerduct to within 6-inches of the patch panel.

## VI. OUTDOOR FIBER OPTIC CABLE

### A. GENERAL

1. SYSTEM DESCRIPTION

A) Optical fiber cables shall be placed inside a loose tube buffer tube.

B) Each buffer tube shall contain up to 12 fibers.

C) The fibers shall not adhere to the inside of the buffer tube. Each fiber shall be distinguishable from others by means of color-coding, EIA/TIA-598

D) Buffer tubes containing fibers shall be colored-coded with distinct and recognizable colors according to EIA/TIA-598. The central anti-bending member shall consist of a glass reinforced plastic rod. The purpose of the central member is to prevent buckling of the cable.

E) Each buffer shall be filled with a non-hygroscope, non-nutritive to fungus, electrically non-conductive, homogeneous gel. The gel shall be free from dirt and foreign matter, and shall be readily removable with conventional non-toxic solvents.

F) The cable core interstices shall be filled with a water-blocking compound that is a non-hygroscope, non-nutritive to fungus, electrically non-conductive, homogenous gel. The gel shall be free from dirt and foreign matter, and shall be readily removable with conventional non-toxic solvents.

G) Binders shall be applied with sufficient tension to secure the buffer tubes to the central member without crushing the buffer tubes. The binders shall be non-hygroscope, non-wicking or rendered so by the flooding compound, and dielectric with low shrinkage.

H) The jacket or sheath shall be free of holes, splits and blisters.

I) The cable jacket shall contain no metal elements and shall be of a consistent thickness. The jacket or sheath shall be marked with the manufacturer's mane, the words "Optical Cable", year of manufacture, and sequential meter marks. The marking shall be repeated every meter. The actual length of cable shall be within 0/+1% of the length marking. The marking shall be in a contrasting color to the cable jacket. The height of the marking shall be approximately 2.5m.

2. PHYSICAL FIBER PERFORMANCE

A) The fiber optic cable shall withstand water penetration, when tested, with a one meter static head or equivalent continuous pressure applied at one end of a one meter length of filled cable for one hour. No water shell leak

through the open cable end. Testing shall be done in accordance with FOTP-82, “Fluid Penetration Test for Filled Fiber Optic Cable.

B) The cable shall withstand a tensile load of 2700 N (600 lbs.) without exhibiting an average increase in attenuation or greater than 0.20 dB (multi-mode) and 0.10 dB (single-mode). The test shall be concluded in accordance with FOTP-33, “Fiber Optic Cable Tensile Loading and Bending Test”, using a maximum mandrel and sheave diameter of 560 mm. The load shall be applied for one hour in test Condition II of the FOTP.

## END OF SECTION

# SECTION 27160

# HORIZONTAL CABLING

A) GENERAL

1) SYSTEM DESCRIPTION

(A) The High-speed Data Cable System is designed to accommodate data applications; specifically Ethernet based applications, up to 1 Gigabit with a manufacturer guaranteed electrical performance at up to 500 MHz bandwidth as tested with a passive tester, including high-speed Internet access, possible VOIP, and other current or emerging spectrally compatible technologies. The various data and derived voice services use between one and four of the twisted pairs in each cable. Most services provisioned on this system use two twisted pairs or circuits, but multiple individual four-pair cables can be configured as single risers for spectrally tolerant like applications and/or distinct transmit and receive cables for legacy T-1 type services.

(B) Both the data and analog voice cabling shall be provided by the University's Telecommunications and Network Services (TNS). Installations shall support a minimum of three station jacks at each workstation location, one voice and two data jacks. The horizontal cable extends from the station outlet (jack) to the horizontal termination block or patch panel in the Telecommunications Room (TR) or building Equipment Room (ER).

(1) Data – Each data jack shall be supported by a four pair, 24 AWG, 100 ohm, UTP Category 6 that meet or exceed standards in accordance with ANSI/TIA/EIA 568B and any addendums. ISO/IEC 11801 for Category 6 cable. The Category 6 data cable forms one part of a matched impedance structured horizontal cabling channel. The horizontal cable is part of a structured cabling system that meets guaranteed performance while working with the selected horizontal termination hardware and patch cords. Plenum rated cable must be used, and all four pairs must be terminated on both ends.

(2) Voice – Each voice jack shall be supported by a four pair, 24 AWG, 100 ohm, Category 6 UTP cable that meets or exceeds standards in accordance with ANSI/TIA/EIA 568B and any addendums, Commercial Building Telecommunications Wiring Standard. Plenum rated cable must be used, and all four pairs must be terminated on both ends.

(C) All building data based circuits originate in the Equipment room/Main Cross-connect room, and are routed directly to one or more evenly dispersed ICs, via fiber optic cables to electronic switches or routers for final conversion to CAT 6 RJ45 patch ports for final horizontal twisted pair copper distribution. The horizontal cabling shall be installed in a star topology with a dedicated cable to each jack.

(D) The horizontal cabling typically runs horizontally along the floor or ceiling of a single floor.

(E) The Contractor shall maintain manufacturer recommendations for bend radii on all cable installations.

B) WIRELESS ACCESS POINTS

1) General Information

(A) All wireless design shall be performed by UVM Telecommunications and Network Services (TNS)

(B) TNS will perform pre-installation (passive) survey(s) and post (active) survey(s)

(C) TNS shall be provided a list containing the building materials for the floors and walls

2) Installation

(A) The wireless Access Points (APs) shall be installed 12" below finished ceiling for typical installations. Where the ceiling height is over 8' the AP shall be installed at 7' AFF

(B) Each location shall have 4”x2 1/4” black box with a single gang mud ring.

(C) Each location shall have 2 white cat-6 cables provided by TNS.

(D) Installation procedures and techniques are typical with previous data cabling standards

## C) PRODUCTS

### 1) MANUFACTURERS

(A) TE Connectivity

### 2) MATERIALS

(A) As telecommunications hardware technology is constantly evolving, telecommunications consultants and contractors shall inquire with the University’s Network and Telecommunications Services Group for an updated list of components and associated part numbers that shall be specified and installed on campus.

## D) EXECUTION

### 1) INSTALLATION

(A) The High-speed Data Cable System is comprised of multiple 4-pair Category 6 cables routing from the IC or HC to a work area. The 4-pair Category 6 cables that route from the IC or HC are loosely bundled together. The cables shall be terminated on rack mounted patch panels in each telecommunications room.

(B) The IC or HC shall employ “Cross-connect” patch panels. All Cross-connect panels shall employ the following termination methodology:

(1) All distribution cables routing from the IC or HC shall be terminated on vacant port positions of an RJ45 patch panel as shown in the drawings.

(2) No form of jumpers shall be installed.

(C) Category 6 cables shall not be kinked or unduly twisted, nor shall the integrity of the cable sheath be compromised in any fashion. Cable bundles shall not be clinched or tie wrapped together with excessive force, thereby holding jacket deformation to a minimum. Individual cable bend radii may be no less than four times the cable diameter or 0.6 inches, whichever is greater.

(D) Maximum pulling tension for four pair horizontal UTP cable is 110N (25 lbs).

(E) During termination, pair twists shall be maintained as close as possible to the termination point for all Categories of copper horizontal cables. In any case, the amount of untwisting must not exceed .25 inches at the point of termination for Category 6 cables.

(F) All telephone and data station cabling shall be continuous wire from the nearest cross connect to the telecommunications outlet.

(G) All modular jacks for data circuits shall be eight conductor, RJ-45 non-keyed and rated equivalent to the cable being installed. Termination configuration shall be in accordance with the standard TIA/EIA T568B pin/pair-wiring configuration. The bottom left or “C” position jack shall be yellow in color, while the bottom right or “D” position jack shall be green in color.

(H) All modular jacks and horizontal cabling for voice circuits shall be blue in color, eight conductors, terminated into a RJ-45, non-keyed jack, rated equivalent to the cable being installed. Termination configuration shall be in accordance to standard TIA/EIA T568B Pin/Pair wiring configuration.

(I) Telecommunications drops serving the voice and data needs shall be flush to the wall type. The standard configuration is as follows:

Top left jack – Voice (blue cable color)

Top right jack – Blank

Bottom left jack – Data (yellow cable color)

Bottom right jack – Data (green cable color)

(J) Do not twist the cable during the pulling processes.

(K) Do not cinch cable bundles tightly. Velcro straps should be used on all cable bundles as opposed to cable ties in order to avoid over tightening and subsequent deformation of the cable jacket.

(L) In the Equipment and Telecommunications rooms, install enough slack to reach the floor on the entrance wall and extend the length of the longest wall in the room. Include slack in all length calculations to ensure that the horizontal cable does not exceed 295 feet in length from telecommunications room to work area outlet.

2) FIBER TO THE DESKTOP

(A) Fiber to the Desktop: Within any building, there may be areas where the fiber will be terminated at the work station. This is not a typical installation, and any horizontal fiber optic cable installations shall be specified by the TNS. In each case a 4-strand 50 micron multimode fiber cable will be originate in the appropriate IC location and terminate in a wall outlet at the work area. LC or MTRJ connectors shall be employed for termination purpose at the wall outlet. Verify connector type with TNS for each installation. In each case, two of the four strands shall be terminated at the wall outlet, with the remaining two strands left dark for future capacity.

(B) The maximum pulling tension for 2- or -4-fiber cables is 220 N (50lbf).

3) WALL MOUNTED INSTRUMENT WIRING

(A) Wall phones, pay phones and other installations requiring the use of a wall mount jack shall be supported by a four pair, Category 6, 24 AWG, 100 ohm, UTP cable. This cable will meet or exceed standards and requirements that are applicable to four pair inside wiring cable for plenum or general wiring within a building as defined in ANSI/TIA/EIA 568A and 568B and any addendums, Commercial Building Telecommunications Wiring Standard. Plenum rated cable must be used, and all four pairs must be terminated on both ends.

4) LABELING PLANT WIRING

(A) Each end of the cables and all pairs shall be labeled at their termination locations. All jacks shall be marked with engraved letters and/or symbols indicating the jack layout as provided above. A sequential number shall be assigned by the installer to each the Telcom Outlet. The first box installed should be Telcom Outlet 001, followed by Telcom Outlet 002, and so on. There shall never be two or more outlets in a room with the same sequential number. Outlet designation shall begin clockwise around the room, e.g. through the main entrance to the left. Refer to section 27900 for additional identification requirements.

(B) Label each port with the RJ45 strip and the position it corresponds to at the patch panel/termination block end. The locations of the outlets are to be determined by site inspection with the Network and Telecommunications Services (TNS) group before installation commences. When the contractor provides the wiring, an “As-Built” drawing with all room jacks identified must be provided to the College.

(C) Each telecommunications outlet and corresponding termination in the telecommunications closet shall be identically labeled with an electronic label maker. Labels are to be ½ inch in size with black letters and white background, fixed with permanent adhesive and neatly placed.

(D) All outlets not in use, either wired or empty, must have a blank plate covering the outlet and the wire shall be tagged and identified with the location of the originating location. All blank ports shall be covered with a blank insert.

(1) UTP Pin Assignments/Color Identification (EIA/TIA 568-B):

| Conductor ID | Color Code | RJ-45 Pin No. |
|---|---|---|
| 1 | Blue | 4 |
| | White-Blue | 5 |
| 2 | Orange | 1 |
| | White-Orange | 2 |
| 3 | Green | 3 |
| | White-Green | 6 |
| 4 | Brown | 8 |
| | White-Brown | 7 |

(E) Refer to section 27900 for additional identification requirements

5) WIRING TYPES

(A) The following Structured Cabling shall be used for all intra-building installation at University of Vermont

(B) Cable Category 6 UTP (phone)

(C) Cable Category 6 UTP (data)

(D) Cable Category 6 UTP (Wall phones and Pay phones)

(E) Cabling to EIA/TIA 568B (and any addendums) Standards and EIA/TIA Category 6 Standards. All Category 6 runs are 4 Pair, UTP Cables. Cable distance from mechanical termination in the telecommunications room to the telecommunications work area outlet (Permanent Link) shall not exceed 275 feet, independent of media type. Overall horizontal channel length to include patch cords in the telecommunications room and at the work area outlet shall be 328 feet, of which a maximum of 16 feet shall be used at the work area outlet.

(F) The cable supplied, installed and terminated by the Contractor or in conjunction with the TNS shall have twisted pairs and their related colors as indicated above. The Contractor shall ensure the twist rate of the individual cable pairs is maintained as close as physically possible to point of termination on all cables. No more than 13mm of sheathing shall be removed from each end of cable.

(G) No bridge taps or splices are to be used in ANY UTP runs. All cables shall be home run to the telecommunications closet.

(H) UTP cable designated for voice (phone) must be blue.

(I) UTP cable designated for data must be yellow and green as indicated under Section 3.1. I above.

(J) Velcro Cable ties are to be installed and used on all wiring racks and patch panels.

(K) On completion of the installation work, the TNS shall test and certify all installed cables to ensure that they meet minimal specifications for data transfer rate on Cat 6 cabling. Should any failures arise that the TNS deems cable related, the Contractor shall return to the site as many times as required to correct the situation, which may include the placement of a new cable.

(L) The Contractor will supply all materials, unless otherwise specified either in this or other related sections of the University's Communications Cabling Infrastructure System Specification.

6) TELECOMMUNICATIONS DROP LOCATION

(A) Unless otherwise specified, the following number of telecommunications drops shall be installed in the following quantities, depending on the function of that particular office/room. Unless otherwise noted, the typical telecommunications drop configuration shall be as indicated under section 27160, 3.1. I.

(1) Faculty/Administrative Offices: Each office shall have two (2) telecommunications drops per designated occupant, or a minimum of one (1) drop per 80 square feet.

(2) Clerical/Staff Offices: One (1) telecommunications drop at the location of each desk and one (1) additional drop for a facsimile or printer. An additional telecommunications drop shall be provided for each staff member working in the space.

(3) Conference Rooms: A minimum of four (4) telecommunications drops per room. One (1) drop shall be located on each wall. Rooms with more than 500 square feet shall have additional drops equally spaced on each wall, locations approved by the TNS.

(4) Classrooms/Lecture Halls/Auditoriums: A minimum of one (1) telecommunications drop shall be installed on each wall. This drop shall contain the minimum service as described under Section 3.1.I above, with the addition of a minimum of one CATV jack; Thus the minimum telecommunications drop shall include (1) voice, (2) data and (1) CATV media and terminal hardware ready for operation at projects end. The number of drops are based on student occupancy as indicated below:

| Number of Drops | Student Occupancy | TV Drops* |
|---|---|---|
| 4 | 1 – 16 | |
| 6 | 17 – 32 | |
| 8 | 33 – Over | *One drop in the front of room and another in the ceiling for projection TV. |

The recommended location priority for the drops would be:

1) Chalkboard and ceiling
2) Inside wall with proper spacing
3) Projection booth/rear wall
4) Remaining sides

(5) Residence Halls: One (1) telecommunications drop per occupant of each room. The location will be determined during design stages of the project. This drop shall contain (1) voice, (2) data and (1) CATV media and terminal hardware ready for operation at projects end.

(6) Storage Areas: One (1) telecommunications drop per room. Two (2) drops per room over 500 square feet with one (1) additional drop for each additional 2000 square feet.

(7) Laboratories – are unique and at times may require more or less telecommunications resources. Therefore, the design professional should consult with UVM Telecommunications and Network Services on a case by case basis to assure that needs are met.

(8) Modular Office/Open Areas- are unique and at times may require special modular telecommunications hardware. Special conduit and termination boxes may also be required. Therefore, the design professional should consult with UVM Telecommunications and Network Services on a case by case basis to assure that needs are met.

(9) Elevators - A dedicated 1-inch homerun conduit shall be run from the telecommunications room to the elevator equipment room and connected to a 2”W x 3”H x 2 ½”D single gang box adjacent to the elevator equipment. Elevator instruments are normally provided by UVM Telecommunications and Network Services. The design professional should consult with UVM Telecommunications and Network Services concerning the university instrument of choice.

(10) Card Swipes / Security Sensors – When these devices are required a 1-inch conduit shall be provided to the location of the device.

(11) Blue Lights shall be served by a 1 inch diameter conduit originating from the closest telecommunications room.

(B) DROP INSTALLATION

(1) All standard outlet boxes installed in dry wall, plaster or concrete block shall be four (4) inches square by at least 2 1/4" deep. It is absolutely critical the inside opening area matches the outlet installation enclosure. The plaster rings must be level and positioned flush with the finished surface. Boxes should be installed 18 inches above finished floor or the same height as electrical outlets at the workstation. Do not install outlet boxes back to back to serve adjacent rooms. Boxes should be offset to avoid compromise of the effectiveness of the sound barrier. Boxes shall not be installed and connected by the same 1-inch conduit in a daisy chain method or from floor to floor.

(2) Outlet boxes for wall instruments, payphones and other special applications shall be 4"W x 4"H and at least 2 1/4" deep. These boxes should be mounted at 54" to the center of the back box above the finished floor unless obstructed. Installation of outlets where obstructions exist shall meet all ADA requirements for clearance as specified below.

(3) For wall phone only, outlets shall use a single gang mud ring.

(4) Outlets are to be mounted at standard industry heights and positions, as listed below, unless otherwise specified.

(i) Desk – 18 inches AFF (Dual gang plaster ring)

(ii) Wall – Verify with the TNS (Single or dual gang plaster ring)

(iii) Handicapped wall mounts are as follows:

1. Maximum height side reach is 54 inches AFF. (Single gang plaster ring only).

2. If side reach occurs over an obstruction 24 inches wide and 34 inches high, maximum height is 46 inches. (Single gang plaster ring only).

3. Maximum height forward reach is 48 inches. (Single gang plaster ring only).

4. If forward reach occurs over an obstruction 20 to 25 inches, the maximum height is 44 inches. (Single gang plaster ring only).

(iv) Cable Television is normally installed at the height of TV mounting. Use only a single gang plaster ring.

**Note:** Electrical outlets shall be provided for TV and projection devices at heights appropriate to the telecommunications drop location AFF.

(5) A minimum of 12-inches of slack coil is required for all UTP cable installations and a minimum of 3 feet of slack coil is required for all fiber optic cable installations. Install 1-inch conduit (minimum) in wall from box to main horizontal cable pathway (i.e. cable trays) above local ceiling or in corridor. Install plastic bushings on end of all conduits. At locations where conduit in wall must extend into the floor slab to reach the voice/data termination point, the same sized diameter conduit as specified for use in the slab, shall be placed in the wall.

E) DESIGN CONSIDERATIONS

1) Horizontal Cable LINK and CHANNEL Lengths – Horizontal Cabling LINK – The LINK encompasses all components of the horizontal cabling subsystem and include the following:

(A) Telecommunications Outlet

(B) Cable between the Outlet and the Horizontal Cross-connect

(C) Transition or consolidation points

(D) Patch panel or connecting block in the horizontal cross-connect.

(E) Jumpers or patch cords that join the patch panels or connecting blocks within the horizontal cross-connects.

2) The horizontal cabling LINK lengths are as follows:

(A) Horizontal Cable between the Horizontal cross-connect and the outlet – 90 meters (295 ft) independent of media type. This is the cable length from the mechanical termination of the media in the telecommunications room to the telecommunications outlet work area.

(B) Jumpers or patch cords in the horizontal cross-connect – <6 meters (20 ft).

3) The Permanent LINK is the cable installed from the Outlet to the Horizontal cross-connect and includes the Horizontal cable, the outlet and the connecting hardware of the horizontal cross-connect.

(A) Maximum Permanent LINK length – 90 meters (295 ft)

F) HORIZONTAL CABLING CHANNEL

1) The CHANNEL encompasses all components of the horizontal cabling LINK, plus the equipment cords at the workstation and in the room. The horizontal channel contains all of the components required to support telecommunications applications over horizontal cabling. Horizontal Cabling CHANNEL lengths

2) The Horizontal CHANNEL length includes the total length of the LINK and the equipment patch cords or cables.

(A) Combined length for the patch cords and cables used to connect the work area and communications room equipment to the LINK - <10 meters (33 ft) with an allowance of <7 meters (23 ft) of combined length per channel for patch cords, jumpers and equipment cables in the Telecommunications Room and 3 meters (10 ft) for equipment patch cords at the work station.

(B) Maximum Total Channel Length - 100 meters (328 ft)

## END OF SECTION

# SECTION 27170

# FIRESTOP

A) GENERAL

1) SYSTEM DESCRIPTION

(A) Telecom Contractor shall properly fill any firewall breaches created, opened, expanded, used, or otherwise provided for telecommunications pathways, including all floor penetrations, with firestop compound. Telecom Contractor shall be responsible for creating such openings as necessary for cable passage between locations as required. Floor penetrations provided by other parties but used for telecommunications cable shall be sealed with firestop. The standards of the local governing code and all governing agencies (National Fire Protection Agency (NFPA), National Electric Code NEC) are to be adhered to with respect to the materials used, the method of installation, and the maximum allowable space permitted between openings and the installed item and between installed items. Firestop compound shall conform to both flame and temperature ratings as required by local building codes and as tested by nationally accepted test agencies per ASTM E814 or UL 1479 fire tests.

(B) Copies of certified U/L rated firestopping designs must be submitted to the Telecommunications and Network Services for approval prior to installation of any materials.

(C) Pre-packaged Intumescent materials are the preferred material for fire proofing. Do not use concrete for firestopping on cable trays, wireways or conduit. Contractors who use this method will be required to replace all cables affected. Use materials intended and approved by codes and applicable authorities.

(D) Observe special provisions of contract documents that may require the firestopping of all penetrations required by work covered under this document.

2) PRODUCTS

(A) MANUFACTURERS

(1) Hilti or approved equal.

3) MATERIALS

(A) As telecommunications hardware technology is constantly evolving, telecommunications consultants and contractors shall inquire with the University's Network and Telecommunications Services Group for an updated list of components and associated part numbers that shall be specified and installed on campus.

4) EXECUTION

(A) GENERAL

(1) The Telecom Contractor shall avoid penetration of fire-rated walls. Sleeving shall be installed for access where necessary.

(2) Any penetration through fire-rated walls (including those in sleeves) will be resealed with an Underwriter Laboratories (UL) approved sealant. Telecom Contractor shall also seal all floor, ceiling, and wall penetrations in fire or smoke barriers and in any telecommunications rooms or spaces.

(3) Conduits that are left empty shall have removable type firestop materials installed at each end of the conduit to prevent smoke or air migration.

(4) Removable firestop materials shall be installed within each populated conduit systems once all cables within have been tested and accepted.

(5) Conduit sleeves or slots through floors of telecom closets or similar communications spaces shall be required to have firestop materials placed in them.

**END OF SECTION**

# SECTION 27660

# UNDERGROUND PATHWAYS

A) GENERAL

1) SYSTEM DESCRIPTION

(A) The University has a system of underground duct banks throughout its property used for providing telecommunications services to University buildings. The use of conduit space in the duct banks shall be managed by the office of Telecommunications and Network Services (TNS). No cables may be pulled through the University's duct bank system without written permission from the TNS.

(B) The layout of duct banks shall be generally parallel and perpendicular to property and building lines. All conduit and ducts must be terminated with bell ends at the maintenance hole, facility or other termination points. A pull cord shall be installed and tied off in each conduit or pathway. Pull cord used in outside of facilities shall have a minimum test rating of 200 pounds.

(C) In a typical installation, all media, innerducts or multi-cell raceway (triduct) are supplied by the University. Outside plant cabling installation shall be coordinated and managed by the TNS. Each section of multi-cell (triduct) contains a total of three (3) 1-inch diameter compartments. The raceway is shaped and formed to allow the placement of two (2) sections into a single 4 inch diameter conduit. Thus two triduct sections are fed into the 4 inch conduits creating six (6) 1-inch compartments throughout that section of conduit. Thirty feet of slack shall be left in each maintenance hole or manhole. Confirm quantity of conduits in a duct bank section that require triduct with the TNS.

(D) As required by Vermont state law, prior to any excavation activity, the contractor shall have existing underground utilities located and marked. To accomplish this, Dig Safe (888-DIG-SAFE) shall be notified prior to any excavation. No excavation on campus shall occur until all utilities in the proposed construction area have been located and marked.

(1) Asphalt and concrete surfaces shall be sawcut along the duct bank route and at maintenance hole locations as required. Removed material shall be disposed of legally off campus.

(2) All OSHA trenching and excavation standards shall be followed. Unsuitable material shall be disposed of legally off campus, and shall be promptly removed from the project site, without significant on-site stockpiling.

(E) In areas where a duct bank crosses existing utilities of all types, hand excavation must be employed by the contractor.

2) DUCTBANK REQUIREMENTS

(A) The conduit size for all outside plant installation shall be a minimum of 4-inch in diameter. Duct banks used to interconnect maintenance holes shall consist of a minimum of eight (8) conduits. The quantity of entrance conduits to a building must be approved by the TNS.

(B) All underground conduits, duct banks and raceways shall be encased in concrete. Concrete shall be allowed to set for 24 hours prior to backfilling. A #6 AWG copper ground wire shall run parallel to the conduit or duct bank within the concrete encasement. To provide additional tensile strength for the duct bank, the duct bank shall contain a minimum of (6) #4 rebar located longitudinally along the trench throughout the entire area of the crossing. Three bars placed a minimum of 3 inches above the trench bottom and three bars placed at an elevation equal to the top row of conduits. Bars shall be placed twelve inches on center. At five foot intervals, (4) #4 rebar shall be placed perpendicular to the trench crossing for the lower and upper rebar configurations. All longitudinal bars shall be tied together at the ends and each section of the perpendicular bars shall be tied to each length of longitudinal rebar.

(C) Top of concrete shall be buried a minimum of 36 inches below finished grade and meet all local building codes. The 36 inches is measured to the top of the concrete encasement to final finish grade, and includes asphalt, concrete sidewalks, brick paver, seeded topsoil, and corresponding subgrade base layers. Additional reinforcement is to be used when crossing roadways, thus the concrete at all roadways, parking lots or any location that may have consistent vehicular traffic shall be minimum of 3500 psi.

(D) All communications ducts shall be placed so as to contain a minimum of 18-inches of native soil between any power duct banks or cables (i.e. campus high voltage – 5kv -12kv). Should an 18 inch separation with native soil be unattainable, then a minimum of 3 inches of concrete or 12 inches of tamped earth is an acceptable alternative. All communications ducts shall be a minimum of 24-inches from steam pipes and condensate lines if cross perpendicular. When communications ducts run parallel to steam lines a minimum of a six (6) foot separation is required to avoid conduction of heat. When conduits route in the vicinity of other underground utilities such as gas, water or sewer, a separation of 6 inches when crossing and 12 inches when running parallel shall be maintained. All other duct separations must comply with the National Electric Code. The typical telecommunications installation does not allow the sharing of a telecommunications trench with other utilities. However, if special field conditions exist, regarding shared trenching, the TNS will review each situation and make a ruling.

(E) A pull cord shall be installed and tied off in each duct with a minimum test rating of 200 lbs of pulling tension.

(F) All necessary precautions shall be taken by the contractor during construction to prevent the lodging of dirt, plaster or trash in all conduit, tubing, fittings and boxes. All conduits in floors, concrete or below grade shall be swabbed free of debris and moisture before wires are pulled. After installation, all conduits shall be verified clean, dry, unobstructed, capped for protection, labeled for identification, reamed and fitted with bushings prior to acceptance by the TNS. To verify that no obstructions exist in each duct cell, the contractor shall pull a mandrel through each duct cell in the presence of the TNS. Conduits shall be capped for protection, labeled for identification, reamed and fitted with bushings prior to acceptance by the University.

(G) Seal the inside-the-building end of the conduits to prevent rodents, water or gases from entering the building. Use rubber conduit plugs, water plug, or duct sealer, depending upon field conditions.

3) CAMPUS CABLING REQUIREMENTS

(A) The fiber optic cable shall be placed by pulling or blowing procedures. If the cable is placed by pulling, the amount of tensile pull placed on the cable shall not exceed the manufacturer's recommendations. Should the contractor choose to blow the fiber, the contractor shall connect two of the 1 ¼" diameter schedule 40 PVC conduits through the maintenance holes (entrance to egress) included in the end to end run of the fiber optic cable installation.

(1) Once a cable leaves a maintenance hole and travels towards it destination into a building, the fiber optic cable shall be placed within the multi-cell raceway located within the larger 4-inch diameter conduit. The fiber optic cable can either be pulled or blown through the multi-cell raceway systems.

(2) The contractor shall ensure that any fiber optic cable being pulled as part of this project is not coiled beyond its recommended bending radius. In addition, the contractor shall be responsible for racking the fiber optic cable in the maintenance holes.

(3) Prior to the cable pulling operations, the university shall provide the contractor with sketches indicating which duct cell shall be used for each particular section of the fiber optic campus backbone cable pull from source to destination.

(B) The contractor shall ensure during the pulling operation that the amount of tensile pull placed on the cable shall not exceed the manufacturer's recommendations. In addition, the contractor shall ensure that any copper cable being pulled as part of this project is not coiled beyond its recommended bending radius.

(1) Prior to the cable pulling operations, the university shall provide the contractor with sketches indicating which duct cell shall be used for each particular section of the copper campus backbone cable pull from source to destination.

(C) Backbone cables shall be installed using all customary industry standards and practices for such installations. Personnel performing this work must adhere to OSHA confined space entry standards when working within campus maintenance holes.

(1) All cables shall be neatly routed and fastened to cable racking in all maintenance holes. Cables shall be installed so as to facilitate future cable installations, allow for maximum access by technicians, and prevent damage to all cables located in these maintenance holes.

(2) Pull cords: new pull strings should be installed with all cables pulls in there entirety as required on this project. Even in the event that the duct cell used is deemed to be at maximum cable fill capacity, the contractor shall install a pull cord along with the cables being pulled. Contractor shall furnish and install all pull cords.

(3) Cable slack: In each maintenance hole, cables shall be installed with two revolutions of slack loop unless otherwise noted for a particular maintenance hole elsewhere within these design drawings. Slack loops shall be placed a minimum of 6-inches above the finished floor.

4) UNDERGROUND PATHWAY AS-BUILTS

(A) At the completion of the project, as-built drawings shall indicate the appropriate pulling direction for future cabling in each section of duct bank installed for this project.

(B) At the completion of the project, as-built drawings shall indicate duct bank distances between maintenance holes, manholes or handholes installed as part of the project.

(C) At the completion of the project, as-built drawings shall indicate a minimum of three (3) field ties to the center of each access cover on each maintenance hole, manhole or handhole installed as part of the project. Each tie shall be taken from a major, permanent site feature located within 150 feet of the telecommunications structure. This may include, but not be limited to buildings, light posts, or power transformers.

(D) At the completion of the project, as-built drawings shall indicate the vertical elevation taken at the top of the top assembly of each concrete structure (maintenance hole, manhole or handhole) installed over the entire project prior to backfilling operations.

(E) At the completion of the project, as-built drawings shall indicate the vertical elevation at the top of the concrete encasement for each duct bank section terminating at each new structure (maintenance hole, manhole or handhole) installed over the entire project prior to backfilling operations.

B) PRODUCTS

1) CONDUITS

(A) All 4 inch diameter underground conduits shall be corrosive resistant polyvinyl chloride (PVC), utility grade DB 60. Schedule 40 or 80 polyvinyl chloride (PVC) pipe may be acceptable in certain situations, but requires approval from the TNS. All 1-1/4 inch conduits shall be Schedule 40 PVC. All weather “quick set” clear cement by Carlon shall be applied on both the receiving bell end and inserted duct sections. Duct shall be seated to the depth of the Premark indicated on the non-belled end. Refer to Section 4.1.C below for additional information.

2) CONCRETE

(A) A minimum rating of 3000 psi, with 3/8” aggregate. Accelerators shall be non-chloride and not exceed manufacturer’s recommendations. Concrete shall be poured at a 6” – 8” slump and in such a manner as to fill all of the voids in the duct section. Minimum concrete rating for pathways placed under roadways shall be 3500 psi. Other special situations may require the use of stronger or lighter 10 to 1 concrete mixture as directed by the TNS.

3) UNDERGROUND WARNING TAPE

(A) Tape shall be 6 inches in width, orange in color, non-detectable and message shall read “COMMUNICATIONS LINE BELOW”.

## C) EXECUTION

### 1) DUCT BANK ENVELOPE

(A) The duct envelope shall be rectangular in the cross section and be a minimum concrete thickness of three (3) inches around any conduit. The duct envelope shall be sized and placed as shown on construction documents. Where conduit enters a building or a maintenance hole the rebar must be dowed into the existing structure to prevent shearing of the conduits in case of settlement.

(B) Where trench walls are unstable or the trench width is wider than the designed envelope, the duct bank envelope shall be formed as required.

(C) Duct spacers shall be installed every 6-ft. to maintain minimum separations vertically and horizontally, between adjacent conduits, and between the conduits and the sides, top and bottom of the duct bank. Minimum spacing between 4 inch diameter conduits is 3 inches. Conduits shall be anchored at three (3) foot intervals and at each spacer to prevent duct from floating during concrete installation.

(D) All duct runs shall be inspected and approved by the TNS or appointed owner's representative prior to pouring of concrete. At least 24 hours prior notice will be given to TNS that a pour will be taking place. Failure of the contractor to schedule inspection and obtain TNS approval in writing prior to pouring of concrete, will result in the removal and re-installation of the section of duct bank in question.

(E) Each duct run shall be done with a continuous concrete pour. Broken pours are not allowed without written exception from TNS, and provided that four #4 (minimum) rebar is extended 24-inches beyond the end of the envelope at the end of each pour section and at all stub-outs. Rebar shall be a minimum length of 4feet.

(F) Conduits comprising the duct bank shall be anchored to prevent floating during the concrete pouring operation. Anchoring shall be comprised of stakes (rebar) and wire. The wire shall be drawn tight over the top of the highest row of conduits. Anchors shall be placed at a maximum of 6 foot intervals throughout the length of the section of duct bank.

(G) A contiguous run of non-detectable underground marking tape shall be placed directly above the duct bank at 12 inches below finished grade. In addition, toning indicators shall be placed at 50 foot intervals, and at the beginning, middle and end of any sweep or turn. The toning indicators shall be placed on top of the wet concrete no deeper than 5 feet below finished grade. In instances where the top of concrete is greater than 5 feet below finished grade, toning indicators shall be placed horizontally directly above the duct bank within the backfill material, at a vertical elevation of 5 feet below finished grade. In addition, toning indicators shall be places above each corner of a maintenance hole or handhole at similar depths as indicated above regarding duct bank installation. The TNS will provide toning indicators to the contractor.

(H) Entrance conduit shall not include more than two (2) 90 degree sweeps without the installation of a handhole or maintenance hole. Sweeps must have a radius of no less than ten (10) times the inside diameter ofthe conduit.

(I) No "LB's" are allowed in any entrance conduit installation. The minimum bend radius at any point in a duct bank run (horizontally and vertically) is 42 inches for 4 inch diameter conduits and 9 inches for 1.25 inch diameter conduits. Continuous lengths of straight individual plastic conduit can be formed into shallow curves if the curvature radius is 40 feet or greater. The heating of the conduit to allow the formation of long sweeping bends to accommodate changes in direction of the duct bank is acceptable and may be required. In instances where the curvature radius is less than 40 feet, then a 15 foot radius manufactured bend must be used. Any fittings that must be used shall be utility fittings; use of plumbing fittings is not acceptable.

### 2) DRAINAGE OF DUCTBANKS

(A) Duct banks shall be pitched to drain to maintenance holes. All conduit, tubing, raceways, ducts and duct banks shall be installed in such a manner to insure against collection of trapped condensation. Raceway runs shall be arranged to be void of traps.

(B) When conduit passes through exterior concrete walls of any facility, the entrance shall be watertight. Provide pipe sleeves in the concrete with ½ inch minimum penetration entrance seal. Entrance seal to be SikaFlex 1-A.

(C) All conduits shall have watertight connections and be sloped so they drain into the maintenance hole and away from the building entrance. All empty conduits shall be sealed with proper materials to prevent water drainage towards the building.

3) SERVICE ENTRANCE MARKING REQUIREMENTS

(A) Utility markers (toning indicators) shall identify ALL conduit and duct bank routes. Toning indicators shall be placed at 50 foot intervals, and at the beginning, middle and end of any sweep or turn. The toning indicators shall be placed on top of the wet concrete no deeper than 5 feet below finished grade. In instances where the top of concrete is greater than 5 feet below finished grade, toning indicators shall be placed horizontally directly above the duct bank within the backfill material, at a vertical elevation of 5 feet below finished grade. The TNS will provide toning indicators to the contractor.

(B) Prior approval and coordination with the TNS and other concerned parties is necessary when modifications to the existing conduit system are required.

(C) Damages incurred to any conduit are the responsibility of the party involved. All damages shall be reported to the TNS.

(D) The termination of entrance conduit within a building shall meet one the following requirements:

(1) Through Finished Floor – extend 4 inches above the finished floor.

(2) Through Walls – turn conduits down into space and extend them to 8 feet 6 inches above the finished floor.

(3) Through Ceiling – extend to 8 feet 6 inches above the finished floor.

4) SPECIAL APPLICATIONS

(A) Blue Light Emergency BLT towers Phones, Coin operated Pay-telephones, other emergency and outside telephones – Emergency phones located outside require the following:

(1) Provide one (1) 1-inch PVC schedule 40 conduit, buried to a minimum depth of 30", with plastic marker tape placed as described under section 3.1.G.

(2) The conduit shall be terminated in the nearest building telephone equipment room or apparatus room. (closest service location).

(3) Conduit runs shall not exceed 300 feet without a handhole or pull box and shall contain no more than two 90-degree bends per 300 feet, excluding those bends within 3 feet of the pull box.

(4) Conduit and pull boxes shall be for telecommunications cables only and not for joint use with electrical or other utilities.

(5) Install a nylon pull cord with a minimum test rating of 200lb pulling tension.

(B) Handholes/Pull-Boxes installations shall require the following:

(1) Where handholes/pull boxes are used they shall not be used for termination or splice boxes under any circumstances.

(2) Install handholes/pull-boxes in easily accessible locations, preferably not in parking or traveled ways. Access opening shall be set at final finished grade elevation.

(3) Boxes should be provided with weather proof door/panel or cover arranged for access from the top. Avoid installation adjacent to sprinkler systems. Conduits should be installed with sweeps. Do not use a pull-box in lieu of a bend. Telecommunications pull boxes SHALL NOT be used by other utilities.

**END OF SECTION**

# SECTION 27670
# MAINTENANCE HOLES AND PEDESTALS

A) GENERAL

1) SYSTEM DESCRIPTION

(A) The University has an extensive network of telecommunication maintenance holes throughout the campus. The facility design professional should assure that all renovations and new construction projects connect to this system where needed. Any new maintenance hole assignment shall be coordinated through the Telecommunications and Network Services (TNS).

(B) Maintenance hole interior dimensions shall not be smaller than 12' (L) x 6' (W) x 7' (H). Manholes interior dimensions shall not be smaller than 6' (L) x6' (W) x 7' (H). Hand holes (small holes) are not acceptable unless approved by the TNS. The maximum depth of all maintenance holes shall be ten (10) feet from the bottom unless otherwise approved by TNS. Maintenance holes shall be constructed with a minimum concrete strength of 3500 PSI, and conform to 38y detailing by S.T. Griswold. Each maintenance hole shall be constructed for H-20 load rating, which is for deliberate heavy vehicular traffic. Refer to appendix A for details. Roof of maintenance hole shall be 8 inches thick and all rebar shall be 1-1/2 inches clear. In instances where a maintenance hole is placed greater than 10-feet from grade to top of structure, a greater than 8-inch thick roof may be required. Telecommunications designer shall verify cover thickness requirements with S.T. Griswold during the design phase of the project.

(C) The maintenance hole frame and cover shall be a 32-inch diameter Lebaron LE320, and shall be cast with the word "UVM TELEPHONE". No square lids are acceptable unless approved in writing by the TNS. Maintenance hole frame and cover shall have pull-slots for easy removal, and covers shall be specified to meet H-20 load rating, which is for deliberate heavy vehicular traffic. Maintenance hole number, when assigned by the TNS, shall be cast on the cover. Telecommunications maintenance holes shall not be adjacent to or share any walls with electrical manholes.

(D) The access opening for the cover cast into the top section of the maintenance hole shall be 36 inches in diameter and centered in the structure.

(E) Interior hardware shall be shall be resistant to corrosion. All steel shall be galvanized or zinc coated, and all cable racks shall be galvanized or zinc coated. Cable racks shall be installed along each side wall of the structure (long side) and corner racks shall be installed in each of the four corners on the structure. Refer to section 27000, Appendix A for details. Vaults shall arrive on site with concrete inserts precast into structure for easy installation of cable racking. All bolts and inserts associated with the cable racking shall be supplied by the concrete precaster.

(F) All maintenance holes shall have cast in place terminators sized for a nominal 4-inch diameter conduit.

(G) Each maintenance hole shall have a minimum of four (4) pulling rings, 7/8-inch in diameter cast into the bottom of each wall.

(H) Each maintenance hole shall have bonded rebar and bonding strap attachment.

2) PRODUCTS

(A) CONCRETE FORMS AND MATERIALS

(1) Concrete Forms and Reinforcement Materials: As specified in Division 3 Section "Cast-in-Place Concrete."

(2) Concrete: 3500-psi (20.7-MPa), 28-day compressive strength as specified in Division 3 Section "Cast-in-Place Concrete."

3) EXECUTION

(A) INSTALLATION

(B) All materials in a maintenance hole shall be resistant to corrosion. All steel shall be galvanized or zinc coated. All racks in maintenance holes shall be galvanized or zinc coated. All maintenance holes shall have cast iron-steps for climbing in and out; bonding inserts and struts for racking. In addition, maintenance holes shall have pulling rings of a minimum of 7/8" diameter cast into bottom of each wall.

(C) Maintenance holes shall have two 8 inch floor sumps. One sump shall be located directly beneath the access opening of the structure. Ejected water from structure must discharge into a storm sewer, or at a location that provides drainage away from the maintenance hole or duct bank. A drain pipe with a minimum of 2-inch diameter shall be provided for drainage where applicable.

(D) All cables entering the maintenance hole shall provide a slack loop of 50 feet to allow for expansion of the cable. The slack loop shall be placed a minimum of 6-inches above the floor of the structure.

(E) All maintenance hole covers shall be installed flush with the surface of asphalt streets, concrete or brick paver walkways. For non-paved surfaces, the covers shall be installed to ensure that positive drainage away from the maintenance hole occurs.

(F) Maintenance hole racking equipment and cable supports are mandatory. Verify layout with TNS.

(G) All 4-inch diameter conduits entering a maintenance hole shall be sealed watertight prior to backfilling operations through the use of hydraulic cement (water plug or plug tight), and all 1.25 inch diameter conduits enter a maintenance hole shall be sealed watertight prior to backfilling operations through the use of SIKE-FLEX 1-A. All joints in the maintenance hole or hand hole structures shall be made watertight with a double application of mastic that covers the entire perimeter of the joint.

(H) The maximum distance between maintenance holes connected in one run is 300 feet; if a direct path between structures is attainable (i.e. no 90 degree bends). The maximum distance between maintenance holes shall be reduced by 50 feet for every 90 degree bend between structures up to a maximum of two bends.

(I) A total of eight (8) 4-inch conduits are required between maintenance holes.

(J) A total of four (4) 1 ¼" conduits are required between maintenance holes.

(K) Typically, the top of the maintenance hole structure shall be set to allow a minimum of 18 inches of cover from top of maintenance hole to finish grade.

(L) Maintenance holes shall be cleaned of all construction debris prior to acceptance by the University.

## END OF SECTION

# SECTION 27760

# CATV

A) GENERAL

1) SYSTEM DESCRIPTION

(A) Inside coaxial wiring must be RG-6, 75 Ohms manufactured by Commscope. All coaxial video cable must be white, plenum rated.

(B) All coaxial wiring must be tested for attenuation, distortion, signal uniformity, signal-to-noise ratio, hum modulation, and time delay and propagation.

(C) All video cabling installations designs must be reviewed by the University's Telecommunications and Network Services (TNS) prior to installation and must include at a minimum; proposed topology (trunk and branch or loop-through), locations of all splitters and amplifiers, and anticipated system loss calculations.

B) PRODUCTS

1) MATERIALS

(A) As telecommunications hardware technology is constantly evolving, telecommunications consultants and contractors shall inquire with the University's Network and Telecommunications Services Group for an updated list of components and associated part numbers that shall be specified and installed on campus.

C) EXECUTION

1) INSTALLATION

2) Final system installation shall provide a signal level at each outlet of between 3 dBmV and 10dBmV on all channels.

3) All installations shall be aligned and balanced so that the system's amplifiers best matches the signal levels in the designed system. Loss values for RG-6 cables shall not exceed 1.60 dB at 55 MHz or 4.40 dB at 450 MHz.

## END OF SECTION

# SECTION 27770

# TRACKING SYSTEMS

## I) INSPECTION

A) GENERAL

1) DESCRIPTION

(A) Telecommunications and Network Services (TNS) personnel shall have access to all construction sites at all times for the purposes of installing and inspecting communications facilities and equipment.

B) EXECUTION

1) PROTOCOL

(A) To enable Telecommunications and Network Services personnel to inspect telecommunications facilities work, the contractor must:

(1) Provide a progress schedule with the installation of telecommunications raceways and spaces shown as a separate item.

(2) Immediately notify the (TNS) in writing of any changes in architecture or mechanical drawings and specifications affecting telecommunications.

(3) Provide proper access and facilities for inspections.

(4) Notify (TNS) when any work is ready for inspection.

**(5)** All underground work must be inspected and approved by the (TNS) before the site is covered with dirt or concrete. **Failure to have work inspected shall result in a minimum of the uncovering the area or the complete removal and re-installation of the work in question at the contractor's expense.**

(B) Contractor shall provide a final checkout certification letter, Category 6 certified, and inspection reports to TNS on all telecommunications work. All systems by outside vendors will be required to provide a vendor inspection certification and a vendor warranty with binding commitment to a 20 year system performance warranty.

## II) TESTING

A) GENERAL

1) DESCRIPTION

(A) Prior to accepting delivery of the system, TNS will conduct independent verification of acceptance test results submitted by Telecom Contractor. TNS will ensure that the cable plant has been labeled and installed according to

(B) Voice-grade Cable System: Each voice-grade cable system shall be tested to ensure compliance with established standards for wire map (continuity to the remote end, shorts between any two or more conductors, transposed pairs, reversed pairs, split pairs, etc.), correct installation length, and correct attenuation scaled to the installation length. Faults discovered during testing shall be corrected and re-tested prior to activation of the Telecom.

(C) High-speed Data Cable System: Each High-speed Data Cable System shall be tested to ensure compliance with established standards for wire map (continuity to the remote end, shorts between any two or more conductors, transposed pairs, reversed pairs, split pairs, etc.), correct installation length, correct attenuation scaled to the installation length, and Near End Cross-Talk (NEXT) scaled to the installation length. Faults discovered during testing shall be corrected and re-tested prior to activation of the Telecom.

(D) Multimode and Single Mode Fiber Systems: Each Fiber Backbone is tested to ensure compliance with established standards for link attenuation using an optical time domain reflectometer (OTDR), a bidirectional power meter, and multiple wavelength light source. In these tests, the OTDR tracing is recorded for each fiber strand; in addition, the expected attenuation scaled to cable length, total connector attenuation, and the splice loss are summed and compared with actual loss measured at 850, 1300, 1310, or 1550 nanometers.

2) PRODUCTS

(A) All UTP cable testing shall be performed using a Microtest OmniScanner, Fluke DSP 4300, or equivalent cable tester meeting level III accuracy.

(B) Written documentation for all tests performed shall identify each and every tested cable with IDs that match the permanent circuit labeling so that field correlation between test documents and the installed cable and terminals can be readily correlated in all locations.

3) EXECUTION

(A) PROTOCOL

(1) Voice-grade Cable System: The mandatory field test shall verify:

(i) Wire Map

(ii) Correct installed length

(iii) Correct attenuation scaled to the installed cable length

(iv) Opens and shorts

(2) High-speed Data Cable System: The mandatory field test shall verify:

(i) Wire Map

(ii) Correct installed length

(iii) Correct attenuation scaled to the installed cable length

(iv) NEXT scaled to the installed cable length

(v) Structural Return Loss

(vi) Propagation Delay/ Delay Skew

(vii) PSNEXT

(viii) ELFEXT

(3) For 50/125 and 62.5/125 Multimode Optical Fiber: The mandatory bidirectional, power meter and light source field test shall verify link attenuation scaled to the installed cable length (dB/km), connector and splice attenuation using the following formulas:

(i) **Loss Budget @ 850 nm** ± 30 nm in accordance with ANSI/EIA/TIA-526-14

1. Optical Fiber Attenuation = [Link distance in meters] x .00350 dB

2. Connector Attenuation = [Number of connector pairs] x .75 dB

3. Splice Attenuation = [Number of splices] x .3 dB

4. Loss Budget (±10%) = [Optical Fiber Attn] + [Connector Attn] + [Splice Attn]

(ii) **Loss Budget @ 1300 nm** ± 20 nm in accordance with ANSI/EIA/TIA-526-14

1. Optical Fiber Attenuation = [Link distance in meters] x .0010 dB
2. Connector Attenuation = [Number of connector pairs] x .75 dB
3. Splice Attenuation = [Number of splices] x .3 dB
4. Loss Budget (±10%) = [Optical Fiber Attn] + [Connector Attn] + [Splice Attn]

(iii) OTDR testing shall be conducted for each fiber strand. The complete link shall be scanned, and the tracing stored. The following information shall be recorded at all operating wavelengths:

1. Total length attenuation
2. Attenuation per kilometer
3. Splice losses (if any)
4. Connector losses
5. Total link length as indicated by OTDR
6. Any anomalies

(4) Single-mode Optical Fiber: The mandatory bidirectional, power meter and light source field test shall verify link attenuation scaled to the installed cable length (dB/km), connector and splice attenuation using the following formulas:

(i) **Loss Budget @ 1310 nm** ± 10 nm in accordance with ANSI/EIA/TIA-526-7 (Indoor Cable)

1. Optical Fiber Attenuation = [Link distance in meters] x .001 dB (Indoor Cable)
2. Connector Attenuation = [Number of connector pairs] x .75 dB
3. Splice Attenuation = [Number of splices] x .3 dB
4. Loss Budget (±10%) = [Optical Fiber Attn] + [Connector Attn] + [Splice Attn]

(ii) **Loss Budget @ 1550 nm** ± 20 nm in accordance with ANSI/EIA/TIA-526-7

1. Optical Fiber Attenuation = [Link distance in meters] x .001 dB (Indoor Cable)
2. Connector Attenuation = [Number of connector pairs] x .75 dB
3. Splice Attenuation = [Number of splices] x .3 dB
4. Loss Budget (±10%) = [Optical Fiber Attn] + [Connector Attn] + [Splice Attn]
5. OTDR testing shall be conducted for each fiber strand. The complete link shall be scanned, and the tracing stored. The following information shall be recorded at all operating wavelengths:

    i. Total length attenuation
    ii. Attenuation per kilometer
    iii. Splice losses (if any)
    iv. Connector losses
    v. Total link length as indicated by OTDR
    vi. Any anomalies

(5) Contractor shall test entire network cabling system after installation. After installation, all cables shall be tested and certified for performance at their transmission level: i.e. Category 6. All unshielded twisted pair

data cable runs must meet or exceed Category 6 standards (permanent link) for all applicable parameters. Any cable run that does not pass each and every criterion will NOT be accepted. The contractor shall provide a signed statement that all circuits were successfully tested and documented for each wire, for support of Warrantee, as part of the acceptance criteria. The contractor shall guarantee 100% good pairs on all cables.

(6) All transmission category testing documentation, including attenuation and near end crosstalk shall be provided on a pass/fail basis. The cable vendor shall maintain a database of actual results of all tests for all devices and wiring in the scope of work. A copy of this information shall be provided to the Owner. In addition to the above, provide shortest distance set of results, a typical middle distance set of results and a longest distance set of results for each horizontal cable in each communication room.

(B) DOCUMENTATION

(1) Submit test results in software files and in written documentation certifying that each cable has passed its EIA/TIA transmission category minimum requirements, to the Owner's Director of Telecommunications/or designee. Two copies shall be provided to Construction Manager.

(2) For documentation in hard-copy form, it shall be printed on 8½ x 11 white bond paper. Results shall be prepared so that all information in the bound volume(s) can be easily read without unbinding the set.

(3) For documentation in software form, it shall be submitted on CDs, formatted to be read and edited by Microsoft® Excel for Windows. Deviation from this mandatory item requires written approval by Construction Manager.

(4) Results shall be presented in a form that can be collated by media type. The output results shall be submitted in a form that permits the reader to quickly identify whether or not each cabling link falls within the performance parameters specified within this Section, 27770.

## END OF SECTION

# SECTION 27800

# GROUNDING AND BONDING

## I) GROUNDING BACKBONE

A) GENERAL

1) SYSTEM DESCRIPTION

(A) Telecommunications grounding and bonding is additional grounding and bonding specifically for telecommunications systems and serves to minimize electrical effects and hazards, augment electrical bonding, and lower the system ground reference potential. The grounding backbone, cable, and busbars shall be installed as specified in the drawings and specifications and shall strictly adhere to EIA/TIA 607.

**(B) The information provided in this document for the design of a telecommunications grounding and bonding system does not replace national, state, local or other applicable codes, laws, or regulations.**

(C) The grounding backbone is comprised of (1) TMGB located in the equipment or Main Cross-connect room and TGB's located in the telecommunications service entrance room as well as in each of the telecommunications rooms and customer premises equipment rooms. The TMGB is the point of connection for the building electrical service ground to the telecommunications grounding system. An appropriately sized TBB shall be routed between the ground bars as shown on the construction documents.

(D) The cable from the electrical service entrance facility to the TMGB shall be a single contiguous cable with no form of splices, sized as shown in the TBB sizing requirements table located in Part 2 below.

(E) Grounding connections from telecommunications equipment to TGBs in telecommunications rooms shall be installed as shown on the design drawings.

(F) In existing buildings or structures without an electrical service installed, a ground rod that is 8 feet long and ½" in diameter shall be driven into the ground.

B) PRODUCTS

1) MATERIALS

(A) The TMGB shall be constructed of copper or alloy and be capable of multiply, appropriately sized connections. Typically the TMGB shall be located on plywood backboard in both the equipment rooms and the telecommunications rooms.

(B) From electrical service entrance facility to TMGB: Solid or stranded copper, bare cable (in plenum environments) or green-jacketed cable (in all other environments) sized per *TBB Sizing Requirements* table, below.

(C) From TMGB to TGBs in telecommunications service entrance room: solid or stranded copper, green-jacketed; sized per *TBB Sizing Requirements* table, below.

(D) From TMGB to TGB's located in each telecommunications room: solid or stranded copper, bare cable (in plenum environments) or green-jacketed cable (in all other environments) sized per *TBB Sizing Requirements* table, below.

(E) Within a telecommunications space, bonding from metallic raceways, cable trays, cable runways, wire mesh partitions, cabinets, racks and terminal boxes to TMGB: #6 AWG solid or stranded copper, green-jacketed.

(F) TBB sizing requirements: See following chart

| TBB Sizing Requirements | |
|---|---|
| Linear route footage from Electrical Service Entrance to TMGB | AWG Requirement |
| ≤ 13 | 6 |
| 14 – 20 | 4 |
| 21 – 26 | 3 |
| 27 – 33 | 2 |
| 34 – 41 | 1 |
| 42 – 52 | 1/0 |
| 53 – 65 | 2/0 |
| ≥ 66 | 3/0 |

As telecommunications hardware technology is constantly evolving, telecommunications consultants and contractors shall inquire with the University's Network and Telecommunications Services Group for an updated list of components and associated part numbers that shall be specified and installed on campus.

C) EXECUTION

1) PRACTICE

(A) Because the bonding backbone from the electrical service entrance facility to the TMGB shall be continuous, bonding shall be accomplished either by 2-hole compression connectors or exothermic welded connections. If the cable from the electrical service entrance facility to the TMGB is jacketed, then 1-2 in. of the jacket shall be stripped back, and connection made at the point of the exposed copper using either 2-hole compression connectors or exothermic type welded connection.

2) BACKBONE IN CONDUIT

(A) If it is necessary to install bonding conductors in ferrous metallic conduit that exceeds 3 ft. in length, the conductors shall be bonded to each end of the conduit with a #6 AWG solid copper conductor.

3) INSTALLATION

(A) All conduits that stub into the equipment/Main Cross-connect room, telecommunication room and CPE rooms shall be bonded to ground. At each conduit end, a #6 AWG solid conductor shall be bonded to the conduit's grounding bushing, and the other end of the #6 AWG solid copper conductors shall be bonded to the TMGB. Each conduit is to have a dedicated ground wire (e.g. daisy chaining from conduit to conduit shall not be permitted)

(B) Labels shall be affixed at either end of the conductor interconnecting the electrical service entrance facility to the TMGB. Cables shall be supplied by the University. The labels shall be nonmetallic and state:


WARNING

IF THIS CONNECTOR OR CABLE IS LOOSE OR MUST BE REMOVED, PLEASE CALL THE BUILDING TELECOMMUNICATIONS MANAGER

(C) When routing bonding conductors, use a short direct path that minimizes bends.

(D) Connections shall be made with a bolt or crimp connectors or through exothermic welding. The connectivity of the TBB through the TGBs shall be accomplished with an exothermic weld or other non-mechanical connection to ensure that the TBB does not separate from any given TGB.

(E) Size the TBB per TBB sizing requirements table located in Part 2 above.

## II) UNDERGROUND CABLE

### A) GENERAL

#### 1) SYSTEM DESCRIPTION

(A) Telecommunications and power facilities occupy separate structures in an underground cable plant; therefore underground metallic conductor cables are not exposed to power contact. Bonding cables in telecommunications maintenance holes reduces the overall resistance to ground and equalizes the potentials between the cables. Cables used in underground conduit system have either an outer metallic sheath or a plastic sheath. Cables with an outer sheath are bonded at each maintenance hole, while cables with an outer plastic sheath are bonded at maintenance holes where a splice is made.

(B) In cases where cables area exposed because of aerial to underground outside plant extensions, the following guidelines shall be applied:

(1) Establish and maintain continuity of all metallic cable elements.

(2) Non-metallic splice case bonding connections, s well as lead sleeves and metallic splice cases, should be connected to the maintenance hole grounding system at every maintenance hole location.

(3) Plastic sheath cables do not need to be bonded at pull-through maintenance holes.

## III) MAINTENANCE HOLE – BONDING AND GROUNDING

### A) GENERAL

#### 1) SYSTEM DESCRIPTION

(A) Each maintenance hole shall have bonded rebar and a bonding strap attachment.

(B) Whenever a splice occurs in a maintenance hole, the strength member and other metallic sheath components shall be bonded to the structures grounding system. No bonding is required in maintenance holes when the cable is pulled through without a splice.

(C) All cable support hardware shall be grounded to the structures grounding system

## IV) BUILDING ENTRANCE PROTECTION

A) GENERAL

1) SYSTEM DESCRIPTION

(A) Lightning protection of telecommunications facilities is essential. While federal and state standards must be adhered to, local conditions may require additional investigations and/or modifications to meet site, equipment, and environment or safety requirements.

(B) NEC Articles 250 “Grounding” and 800 “communications Circuits” cover general requirements for grounding, bonding and protecting electrical and communications circuits. NFPA 78 “Lightning Protection” addresses zone protection and other items that are beneficial.

(C) All lightning and power failure protection for all cabling and wiring (including grounding) within the building and entrance facilities with protection from lightning and power failure via grounding and bonding will be accomplished under the construction contract. This grounding shall occur as close to the building entrance as possible, but in no case shall the distance exceed 50 feet.

(D) All exposed telecommunications cables that contain metallic components such as metallic shield, metallic strength member, or metallic pairs require a form of electrical protection at the building entrance to include the following:

(1) Bonding and grounding of cable metallic sheath components and metallic strength members.

(2) Installation of protectors to metallic pairs, along with fuse links, where required.

(E) The TMGB located in the Equipment Room is the main telecommunications grounding busbar and is designed as the connection point for protectors. It must safely carry lightning and power fault currents.

(F) Any “exposed” outside plant cables should be directly connected to the TMGB located in the ER.

**END OF SECTION**

# SECTION 27900

# IDENTIFICATION

A) GENERAL

1) SYSTEM DESCRIPTION

(A) Because the Telecom is a comprehensive, integrated design and managed approach toward cable utilization, proper and comprehensive labeling is critical. To ensure the success of this component of the system design, all labels shall be fully compliant with the requirements set forth in this section, and no labels shall be installed until each type is reviewed and approved by the Telecommunications and Network Services (TNS) group. Telecom Contractor is responsible for furnishing and installing all labels and label holders as specified herein.

(B) All labels shall be installed in coordination with the University's Network and Telecommunications Services Group.

B) PRODUCTS

1) MATERIALS

(A) Telecom contractor shall coordinate with the University for labeling equipment that will best match existing labeling. As telecommunications hardware technology is constantly evolving, telecommunications consultants and contractors shall inquire with the University's Network and Telecommunications Services Group for an updated list of components and associated part numbers that shall be specified and installed on campus.

C) EXECUTION

1) SYSTEM DESCRIPTION

(A) Telecom Contractor shall furnish all labels, which shall contain all appropriate circuit numbering and cable identification information as specified herein and in coordination with the school's information technology group.

2) TELECOM OUTLET AND TR ROOM TERMINATION

(A) Each Telecom Outlet and corresponding termination in the telecommunications room shall be identically labeled with an electronic label marker. Labels shall be 1/2" inch in size with black lettering and white background.

(1) **Outlet Box Identifier** shall include the following: Room, Slash, Outlet Number and Jack/Port Letter

(2) **TR Room** Identifier shall include the following: TR Room Number, Slash, and Panel ID

**(B) Designations:**

(1) **Room** is the room number where the outlet is located.

(2) **Slash** is a separator between Room and Outlet Number.

(3) **Outlet Number** is a sequential number assigned by the installer to the Telecom Outlet. The first box installed should be Telecom Outlet 001(1), followed by Telecom Outlet 002(2), and so on. There shall never be two or more outlets in a room with the same sequential number. Outlet numbers are assigned beginning with the first telecom outlet to the left as the room is entered as being 001. All other telecom outlets are assigned in clockwise throughout the remainder of the room (left to right).

(4) **Jack/Port Letters** are the jack Letters. These Letters should be labeled as pairs. They will either be A B or C D for jack pair one and two or jack pair three and four depending on the particular outlet installation.

(5) **Telecom Room** (TR) is the service room where the Telecom Outlet cabling is terminated. Room is comprised of the varying digit number assigned to each space within the campus.

(6) **Block/Patch Panel ID** is comprised of the wiring block letter designation A, B, C.., or the Equipment Rack #1, 2, 3..., and the cross-connect block (voice) or patch panel (data) letter A, B, C..., *Example*: The third cross-connect block on the fourth rack, front side, would have an identification label of 4FC.

(i) Example:

Outlet 001installed in room 200 with jacks A (voice) and jacks C and D (data) cabled and voice/data cables terminated in TR "A" is as follows:

Voice: TR room "A" (RM 100) - on IDC block "A"

Data: TR room "A" (RM 100) – Equipment rack 1, Patch Panel "A", Front Side

Voice Label at outlet – 200/001A:100A

Data Label at outlet – 200/001C:1001FA

Data Label at outlet – 200/001D:1001FA

(7) Labels shall be affixed at the top of the Telecom outlet for ports A and B. If the label were for jacks C and D, the label shall be affixed on the bottom of the Telecom outlet ports below ports C and D. In each case a second copy of the label would also be placed on the corresponding IDC block and patch panel in the TR room, thus labeling at each end of the wire will be identical.

3) FRAME COORDINATE LABELING

(A) Site-specific frame coordinate label information shall be coordinated with the school's information technology group.

(B) Frame coordinate labels are secured to the top and left side of each frame.

(C) Frame coordinate labeling shall be indelible, pre-printed (not hand-written), and permanent, using Brother P-Touch printer or equivalent, Arial font or equivalent.

(D) Labels shall be as large as possible to facilitate legibility from a distance. Labels shall be affixed to a flat surface on the frame – never on the plywood backboard unless approved in writing by the School.

(E) If label is affixed to a black or dark gray surface, label information shall be white in color. If label is affixed to beige or light-colored surface, label information shall be black in color.

(F) Frame coordinate labels for wiring blocks shall be segmented in 25-pair.

(G) In the case of fiber panels only, frame coordinate labels shall be mounted on blank panels.

4) CABLE IDENTIFICATION LABELING

(A) Cable labeling shall be accomplished via pre-printed wrap-around self-adhesive labels and/or Pan-TY nylon marker ties, as directed by the School. Labels shall be made with an electronic cable-marker printer. No hand written leveling will be accepted. Labels shall be installed 3 inches maximum from each end of cable.

(B) Labels shall be affixed to both ends of each riser, horizontal, and tie cable conspicuously displayed just prior to each cable being routed into the termination device.

(C) Lashed bundles of telecommunications cabling routing from TR room "A" to each IC (TR rooms S, T, P, Q…,) shall be grouped together and equipped with a single label at each end.

(D) All other cables, including groupings of voice or data cables routing from TR rooms to outlet locations shall be individually labeled.

(E) Wherever Pan-TY nylon marker ties are employed in cable identification labeling, care shall be taken to avoid de-rating the cable(s) by clinching or tie wrapping with excessive force.

5) CIRCUIT NUMBER / CROSS-CONNECT BLOCK LABELING

(A) All cross-connect blocks shall be equipped with block covers

(B) Pre-printed factory label strips shall be installed in the appropriate clear label holder on each cross-connect block.

(C) Voice-grade cable system

(1) Circuit ID locations: label strips mounted in clear label holders, mounted in the block per manufacturer specifications.

(2) Circuit number detail: 25-pair increments (e.g., 1, 25, 26, 50, etc.).

(3) Circuit number label color: Blue

(D) Fiber riser

(1) Circuit ID locations: Self-adhesive laser-printable sheet affixed to the inside door of the patch panel enclosures. Affixed sheet shall be sized ½ in. smaller in the vertical and horizontal dimension than the fiber patch panel door (e.g. 5.25" H X 19" W door = 4.75" H X 18.5 " W label). Use of more than one label sheet per panel is permissible.

(2) Circuit number detail: per strand (e.g., 1, 2, 3, 4, 5, etc.)

(3) Circuit number label color: White

(E) CONDUIT IDENTIFICATION

(1) All conduits associated with Telecom system shall be labeled at a minimum of 10 foot intervals. Self adhesive, typed letters, 1-1/2" sized, black on a yellow background, shall be used for all labels.

(2) All conduits containing copper voice cables shall be labeled "Copper Telephone".

(3) All conduits containing fiber optic data cables shall be labeled "Data Fiber".

(4) All conduits containing high speed copper data cables shall be labeled "CAT6 Data".

(5) All conduits containing CATV cables shall be labeled "CATV".

(6) Should a conduit contain cables from varying disciplines, such as voice, data and CATV, the conduit shall be labeled with "Communications".

(7) All associated pull and junction boxes shall also be labeled accordingly.

## END OF SECTION

# SECTION 27950

# SUPPORT AND WARRANTY

A) GENERAL

1) DESCRIPTION

(A) The Cabling System shall meet the performance requirements of the ANSI/TIA/EIA-568-B standard and TIA/EIA Telecommunications Systems Bulletin 67. The warranty on the material, services, and operation of the cabling system to this specification must be for a period of at least twenty (20) years. The connecting hardware shall have a lifetime extended warranty against defects in material and workmanship.

(B) If, in the judgment of the Telecommunications and Network Services (TNS), sub-standard materials or workmanship are identified during the course of Telecom Contractor's work, Telecom Contractor will be instructed to correct such defects, up to and including removal and replacement of defective items, at the sole cost of the Telecom Contractor.

(C) Warranty-related defects shall be corrected by the end of the first business day following the date Telecom Contractor has been notified of the defect.

B) SUBMITTALS

1) The warranty must include the following statements regarding the cabling system: "Will support and conform to TIA/EIA-568-B (and any addendums) specifications covering any current or future application which supports transmission over a properly constructed premise network cabling system which meets the channel and/or basic link performance as described in TIA/EIA-568-B (and any addendums) and TIA/EIA-TSB-67." - "Will be free from defects in material or faulty workmanship."

C) PRODUCTS

NOT USED

D) EXECUTION

1) Warrantee documentation and maintenance manuals must be submitted for project closeout and final release of outstanding payments to Contractor.

## END OF SECTION

# SECTION 27990

# APPLICABLE CODES AND STANDARDS

**I)** Part 1

A) GENERAL

1) APPLICABLE CODES AND STANDARDS

(A) The design and installation of UVM telecommunications infrastructure attempts to meet parameters of all applicable local, state and national codes and standards. Issues that fall under codes is a requirement. Though many telecommunications design issues fall under established standards that are not code, these standards have been adopted at UVM and it is highly recommended by this office that the standards listed in this document be followed. At times, conflicts arise between published guidelines such as REA, EIA, TIA, NFPA, IEEE, NCTA, BICSI, and individual company policies. Therefore, this document reflects portions of and/or references the following specifications. Drawing and design documents should be specific for each project and include, either as a direct excerpt or by reference, information from these sources:

- AT&T, former Bell System Practices (BSP's)
- General Telephone, installation and construction practices
- Northern Telecom, installation practices
- RUS (formerly REA), Rural Utilities Services USDA/RUS
- BICSI, Telecommunications Distribution Methods Manual
- ANSI/TIA/EIA-568A, Commercial Building Telecommunications Cabling Standard.
- ANSI/TIA/EIA-568B, Commercial Building Telecommunications Cabling Standard.
- TIA/EIA TSB-67 Transmission Performance Specifications for Field Testing of Unshielded Twisted Pair Cabling Systems.
- TIA/EIA TSB-75, Additional Horizontal Cabling Practices for Open Offices.
- ANSI/TIA/EIA-569A, Commercial Building Standard for Telecommunications Pathways and Spaces.
- ANSI/TIA/EIA-606, Administration Standard for Telecommunications Infrastructure of Commercial Buildings.
- ANSI/TIA/EIA-607, Commercial Building Grounding and Bonding Requirements for Telecommunications.
- ANSI/NFPA-70, National Electrical Code
- NFPA-101, Life Safety Code
- NFPA-780, Standard for the Installation of Lightning Protection Systems.
- Other applicable NFPA Codes.
- ANSI/IEEE Codes, All Applicable Codes.
- NESC, National Electrical Safety Code (ANSI/IEEE C-2, overhead and underground telecommunications cable).
- ISO/IEC 11801, Information Technology. Cabling for Customer Premises.
- IEC 603-7, Part 7, Modular Connectors
- FCC Part 68, Connection of Terminal Equipment to the telephone network.
- FCC Part 15, Radiation Limits.
- FCC Part 76, Cable TV Service. Code of Federal Regulations (CFR) – 10CFR47, Part
- 76.605. Signal Quality for CATV. Federal Communications Commission (FCC).
- Publications and Industry Standards for CATV.
- Society for Cable Television Engineers (SCTE)
- Local Uniform Building Codes
- National Cable Television Association Handbook
- Americans with Disabilities Act, 1992

Finished drawing and design documents should not conflict with the above standards and should not deviate from the intent or spirit of this document. It is the responsibility of the design professional for all designs to meet the most current codes and standards at the time of construction.

## GLOSSARY OF TERMS

| | |
|---|---|
| ADA | Americans with Disabilities Act |
| Aerial Service | Telecommunications Cable installed on supporting structures such as poles, sides or buildings, and other structures. |
| ANSI | American National Standards Institute |
| ASTM | American Society for Testing and Materials |
| AWG | American Wire Gauge |
| Backboard | Plywood covered wall in telecommunications room or in terminal boxes used to mount termination devices, hardware and equipment. |
| Backbone | Cabling and pathway used to connect the telecommunications rooms, cross-connects, entrance facilities and equipment rooms. |
| Bridge Tap | The connection of two circuits in parallel to each other or a cable pair continued beyond the point at which the pair is connected to an instrument. |
| Buried Service | A cable installed under the surface of the ground (not in conduit) in such a manner that it cannot be removed without disturbing the soil. Also called direct buried cable, trenched, or bored. |
| Busbar | A copper bar used as a common point for connection of the building electrical service ground to all telecommunications hardware and equipment in a room or terminal box. |
| Cable Bend Radius | The radius that a cable can bend before risk of damage or decrease in the transmission performance |
| CATV | Community Antenna Television (Cable TV) |
| Coaxial Cable | A central conductor surrounded by dialectric and at ubular outer conductor. |
| Conduit Ductbank | An arrangement of conduit ducts in tiers, encased in concrete used for installing telecommunications cables between buildings. |
| CPE | Customer Premise Equipment Room. Often called Data Equipment Room This room houses private departmental /customer equipment |
| Cross Connection. | A connection made between cables, subsystems and equipment by the use of patch cables, or jumper wires run between the terminating devices. |
| D Ring | Cable Management Device attached to the backboard. |
| DB | Decibel. |
| Demarcation point | A point of interface where two services are connected. An example at UVM would be the point at which the local dial tone provider terminates their cables in the Main Telecommunications Room for cross-connection to the Intrabuilding cabling. |
| EIA | Electronics Industries Association. |

| | |
|---|---|
| EMI | Electromagnetic Interference. An unacceptable or undesired response, malfunction, degradation, or interruption to the intended operation of electronic equipment caused by the coupling of electrical or magnetic fields. |
| EMT | Electrical Metallic Tubing |
| Encased Conduit | Conduit contained inside poured concrete. |
| Exposed Cable | Any cable that is located so that it is subject to lightning, power induction or differences in ground potentials. |
| F Connector | Coaxial Connector commonly used for terminating CATV Cables. |
| Outlet Faceplate | A plate or cover which holds multiple communications jacks, mounted on a surface, and covering the electrical box and communications cables in the wall. |
| FCC | Federal Communications Commission |
| Foot-Candle | A unit of illuminance on a surface that is everywhere one foot from a uniform point source of light of one candle and equal to one lumen per square foot |
| Gas Tube Protector | An Over voltage Protector with metallic electrodes in a gas atmosphere contained in a glass or ceramic envelope. |
| Horizontal Channel | The horizontal cabling which includes all elements of the Horizontal cabling Link, plus the equipment cords in the telecommunications room and the work area. Contains all elements needed to support telecommunications applications over the horizontal cabling. |
| Horizontal Link | The horizontal cabling which includes all horizontal components except for equipment cords in the telecommunications room and at the work station. |
| ICEA | Insulated Cable Engineers Association |
| IDF | Intermediate Distribution Frame. A field of termination devices on which the intrabuilding backbone cables are terminated for cross-connection to the horizontal cabling system. Normally found in the Telecommunications Room on each floor. |
| IEC | International Electromechanical Commission. |
| IEEE | Institute of Electrical and Electronics Engineers, Inc. |
| Interbuilding Backbone | A Cable between two buildings. |
| ISDN | Integrated Services Digital Network. An integrated data network in which the same time division switches and digital transmission paths are used to establish connection for different services. |
| ISO | International Standards Organization |
| KV | KiloVolts (1000 volts) |
| LAN | Local Area Network. A geographically limited data network used for the local transport of voice, data, and video. |
| Loose Buffer | In a fiber optic communication cable, one type of component used to encapsulate one or more optical fibers for the purpose of providing such functions as mechanical isolation, protection from physical damage and fiber identification. The buffer may take the form of a miniature conduit, contained within the cable and |

| | |
|---|---|
| | called a loose buffer, or loose buffer tube, in which one or more fibers may be enclosed, often with a lubricating gel. |
| Maintenance Loop | An additional length of cable on the end of a installed cable that allows for later use if any of the cable must be shortened or the termination devices moved. |
| Maintenance Hole | A hole through which a person may gain access into an underground vault or structure. |
| Marker tape | A plastic tape placed in the ground to identify buried cable location if dug up. |
| MDF | Main Distribution Frame. Also called the Main Cross-connect. The cross-connect in the Main Telecommunications Room (room) where the entrance cables terminate and cross-connect to the building Intrabuilding Backbone Riser cables. |
| Media | The physical path for telecommunications services. (i.e., copper, cable, fiber optic cable, coaxial cable, radio, etc.) |
| Mhz | Megahertz. One million hertz or one million cycles per second. |
| Modular Jack | The modular communications jack that snaps into a faceplate. |
| ER | The Main Telecommunications Room (room) for the entire building. This room serves as the entrance facility for the building where all Outside Conduits terminate. It houses the Main Distribution Frame (MDF), where the service entrance cables terminate and interface with the intrabuilding backbone distribution cabling system and to the horizontal cross-connect and cabling serving that floor. The MDF is considered the point where the regulated telephone company will install the building entrance protectors. |
| Multimode Fiber | An optical fiber that supports the propagation of more than one bound mode. A multimode optical fiber may be either a graded-index (GI) fiber or a step-index (SI) fiber. |
| MUX | A device that combines multiple inputs into an aggregate signal to be transported via a single transmission channel. |
| NEC | National Electrical Code. |
| NESC | National Electrical Safety Code. |
| NFPA | National Fire Protection Association. |
| OFNP | Optic Fiber Non-conductive Plenum. |
| OSHA | Occupational Safety and Health Administration. |
| OSP Outside Plant | Telecommunications facilities located outside of the building. Either underground, direct buried or aerial. |
| TNS | UVM Telecommunications & Network Services |
| Outlet | A faceplate with modular jacks located at the workstation. |
| Pathway | Structures that conceal, protect, and support telecommunications cables. (i.e. Conduit, cable rack, trays, J-hooks, underfloor ducts, cellular ducts, trench ducts, Raised access floor, etc.) |

| | |
|---|---|
| PBX | Private Branch Exchange. Telephone system usually serving as a small Central Office for the individual business and located on their site. Provides access to the public switch network. |
| PE | Cable Filled Cable for use in OSP applications. Designated by the Rural Utilities Service. |
| Plenum | Rated Cable used in a designated area, closed or open, used for the transport of environmental air. |
| PSI | Pounds per Square Inch |
| Pull Box | A device to access a raceway, used for access to allow for pulling cable. |
| Pulling Eye | Metal loop securely fixed to the end of a cable or anchored in the wall of a manhole to allow for the pulling of the cable into the ductbank. |
| PVC | Polyvinyl Chloride |
| Raceway | An enclosed channel or pathway designed to hold cables. |
| Relay Rack | A vertical frame upon which one or more units of equipment and patch panels are mounted. |
| RFI | Radio Frequency Interference. Any Radio Frequency disturbance that interrupts, obstructs, or otherwise degrades or limits the effective performance of electronics/electrical equipment. |
| Riser Cable | Intrabuilding Backbone Cable that runs vertically to the IDF in Telecommunications Room (room). |
| Single Mode Fiber | An optical fiber in which the signal travels in one mode. The fiber has a small core diameter, typically 8.3 µm. |
| Sleeve | A Conduit placed through a wall or floor to allow the passage of telecommunications cables. |
| Solid State Protector | An Over voltage Protector using high-power semiconductor technology providing fast action and balanced circuits. |
| Sump | Manhole fitting at the lowest point of the manhole floor used to pump a manhole dry before working in it. |
| T-1 (Carrier) | A digital transmission system which operates on two twisted pairs at a speed of 1.544 Mbps. The system is capable of carrying 24 channels (individual circuits) at 64Kbps. |
| TBB | Telecommunications Bonding Backbone. A 6 AWG or large copper conductor that provides for direct bonding and runs from the Telecommunications Main Bonding Busbar to the bonding busbar in each TC and CPE room. |
| TCTelecommunications Room. | The Telecommunications Rooms (TC) are “floor serving” and at least one is located on each floor. The IDF and Horizontal cable for the floor are usually located in the TC. |
| Terminal Block | An insulating base with binding posts used to terminate telecommunications cables and cross connect between cables. |

| | |
|---|---|
| Terminal Box | A metal box with a hinged lockable door used for installing terminal blocks, terminating cables and cross connecting. The box provides protection against dust, mechanical damage, weather and vandalism. |
| TIA | Telecommunications Industry Association |
| Tight Buffer | A tight buffer consists of a polymer coating in intimate contact with the primary coating applied to the fiber during manufacture. The protective thermoplastic coating is normally a diameter of 900 microns. |
| TMGB | Telecommunications Main Bonding Busbar. The main bonding busbar is located in the Main Telecommunications Room and provides a connection point for the main building electrical service; ground to safely carry lightning and other power fault currents away from the telecommunications systems. The TBB to other Telecommunications Rooms is connected to the TMGB. |
| TSB | Technical Service Bulletin. |
| Underground Cable | A telecommunications cable installed in an underground duct system which separates the cable from direct contact with the soil. |
| UPS | Uninterruptible Power Supply |
| USOC | Universal Service Order Code |
| UTP | Unshielded Twisted Pair. A transmission line composed of a twisted 2-wire metallic transmission line surrounded by a sheath of non-conductive material. |
| Wire mold | A surface mounted enclosed channel designed to hold cables. |
| Workstation | An individual user interface where the desk, computer, communications, and other equipment is located and connected to the telecommunications outlet. |

References:


Kirick Engineering Associates

BICSI

EIA/TIA

NEC

NFPA

UVM TNS SYMBOLS DOCUMENT AVAILABLE IN CAD FORMAT UPON REQUEST:

EMAIL: network.services@uvm.edu SUBJECT LINE: Request for TNS CAD Symbols

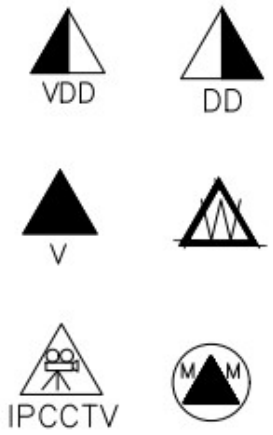


TELECOMMUNICATIONS SYMBOLS KEY

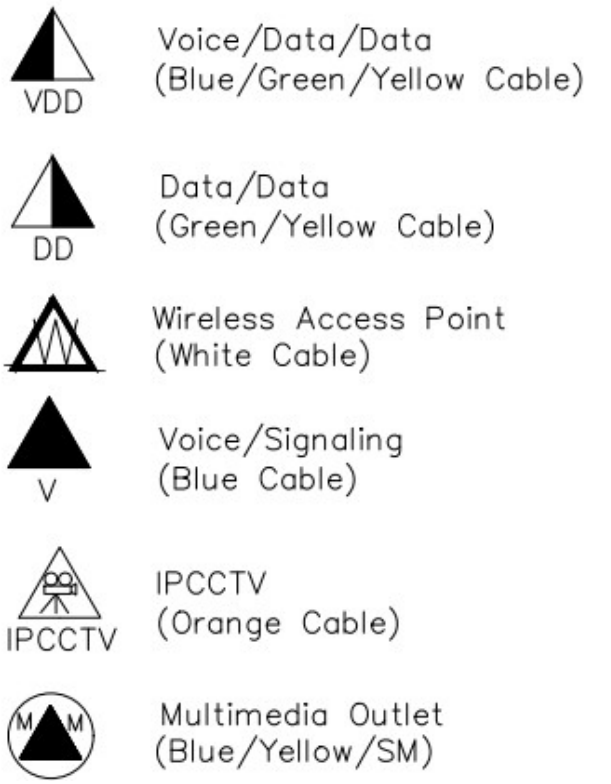

**Detail #1**
**Typical Precast Vault Detail**

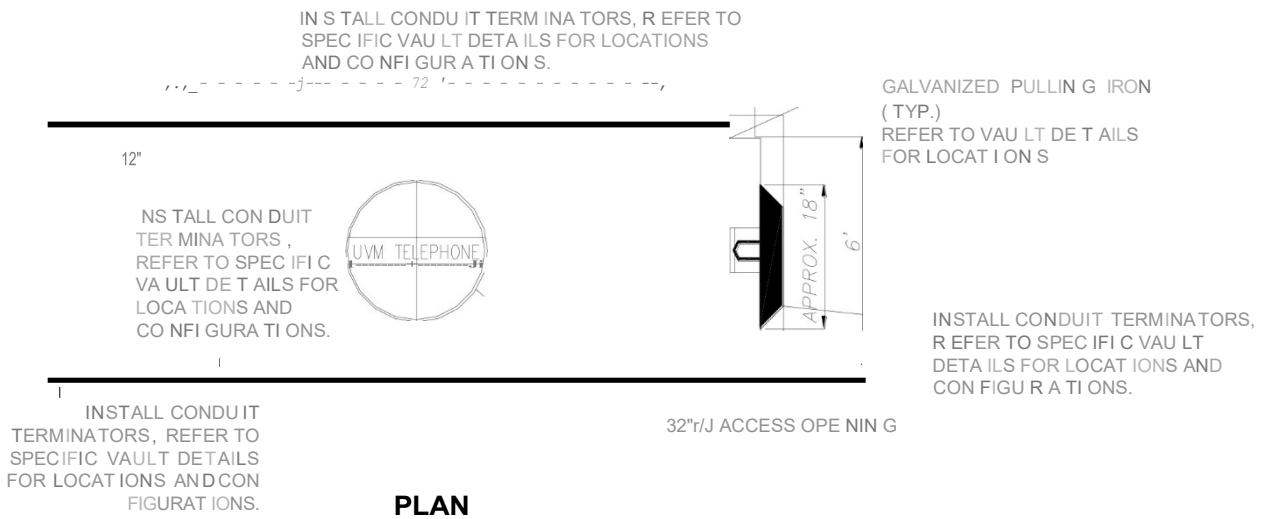


**PLAN**

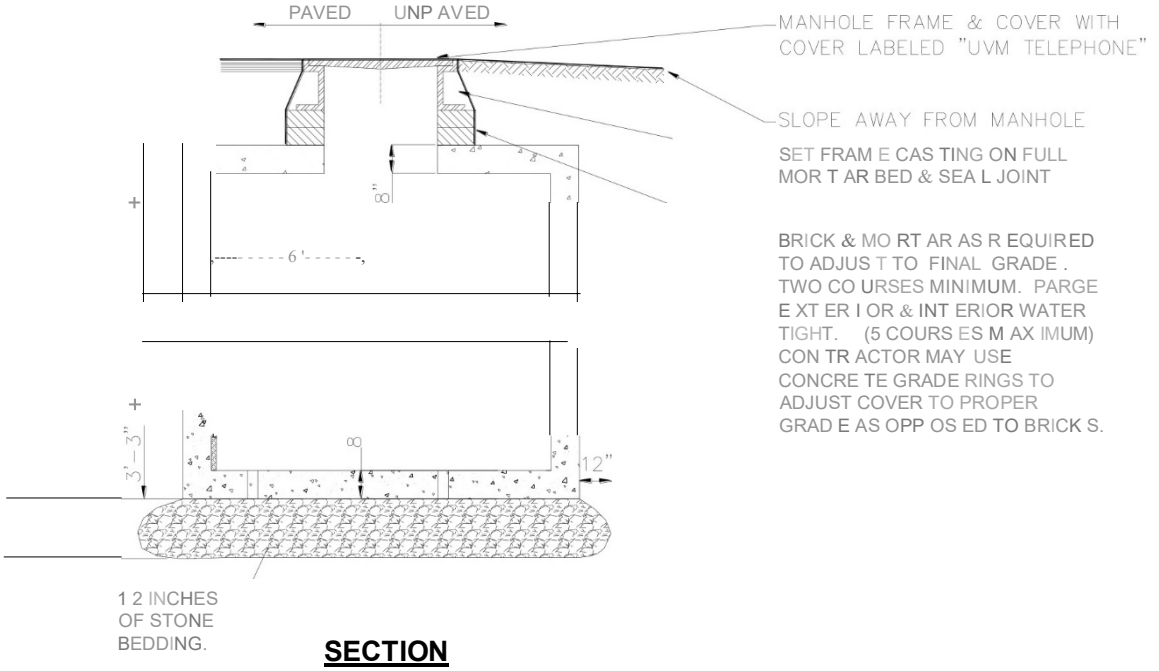


**SECTION**

## Detail #2
## Typical Trench Detail

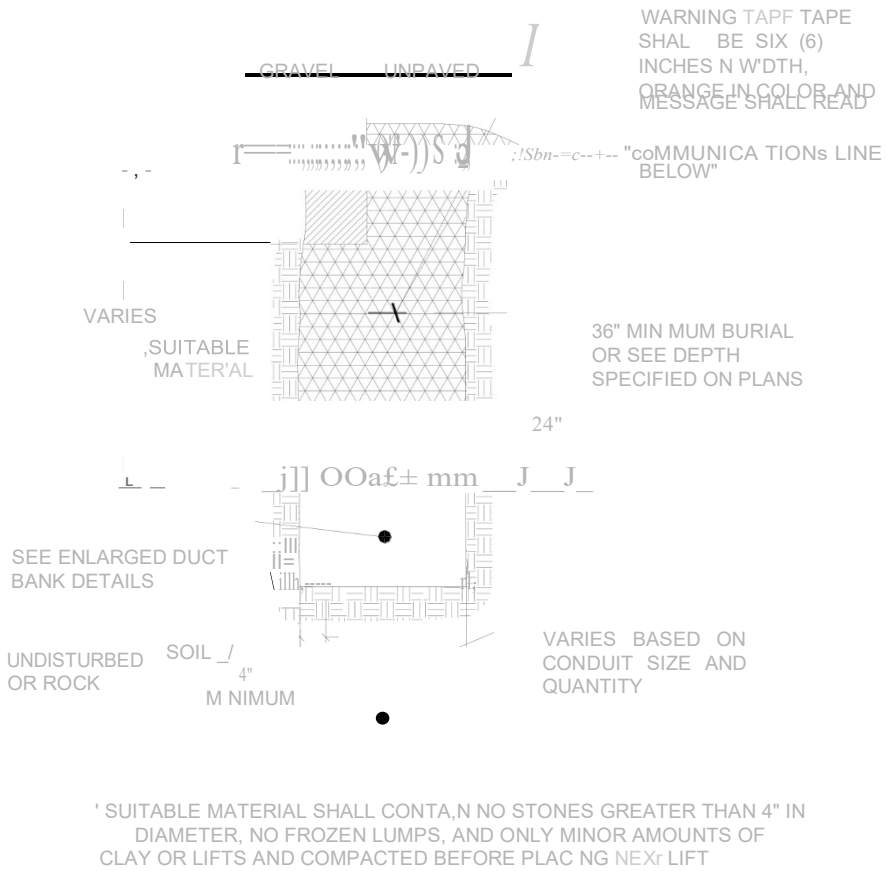


' SUITABLE MATERIAL SHALL CONTA,N NO STONES GREATER THAN 4" IN DIAMETER, NO FROZEN LUMPS, AND ONLY MINOR AMOUNTS OF CLAY OR LIFTS AND COMPACTED BEFORE PLAC NG NEXr LIFT

## Detail #3
## Duct Bank Detail - (8) 4" PVC & (4) 1.25" PVC

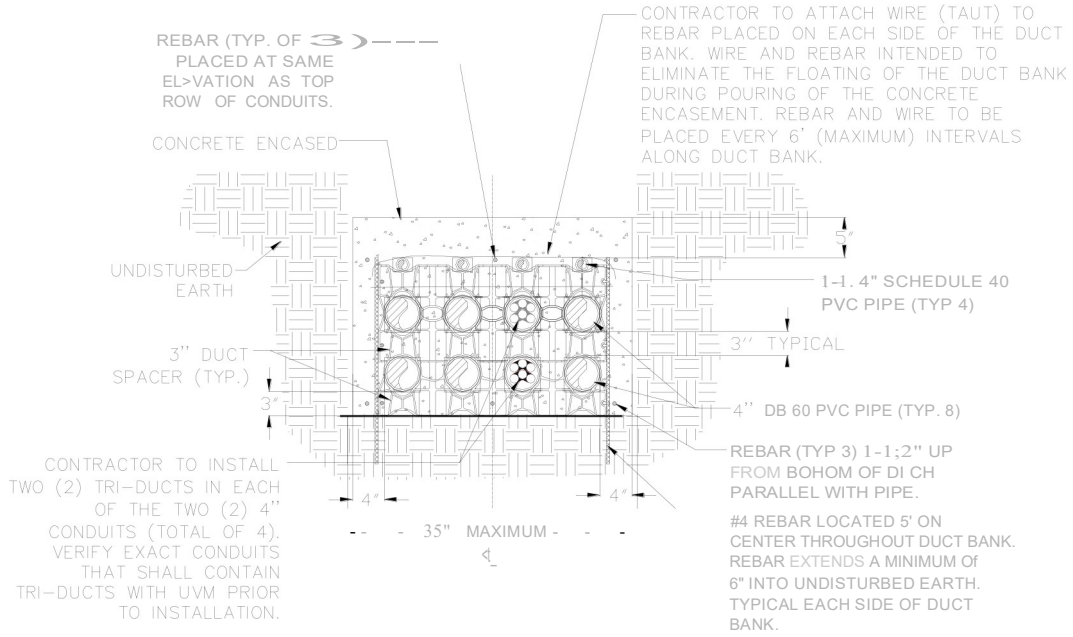

## Detail #4
## Duct Bank Detail - (4) 4" PVC

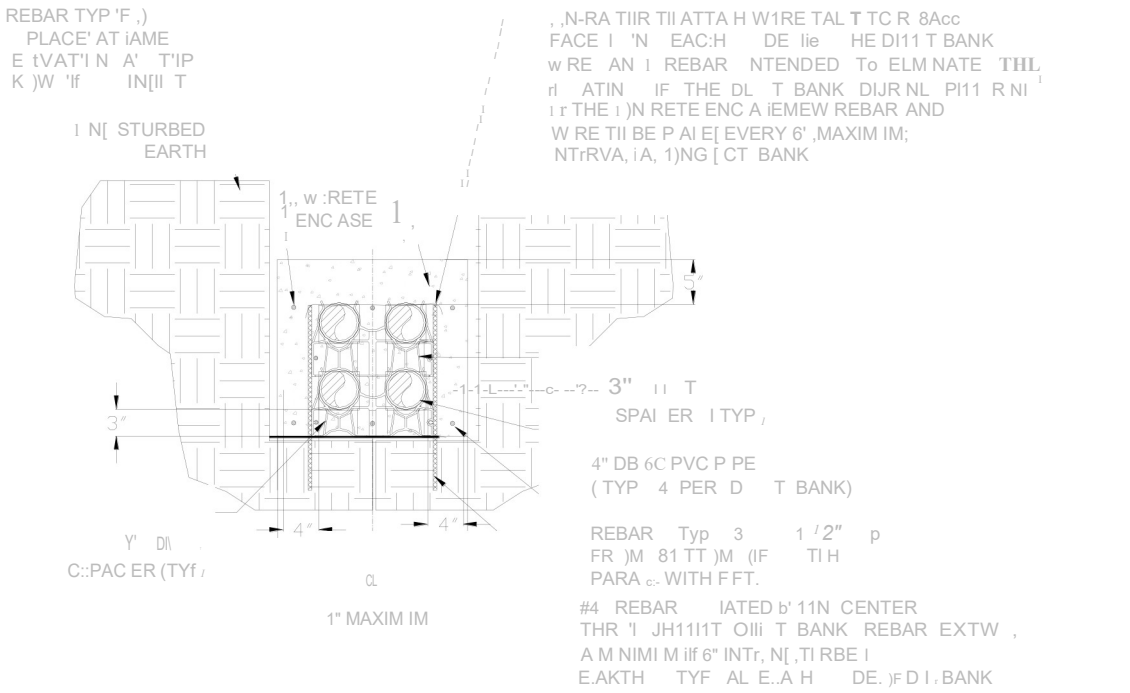


## Detail #5
## Duct Bank Detail Without Insulation - (2) 4" PVC

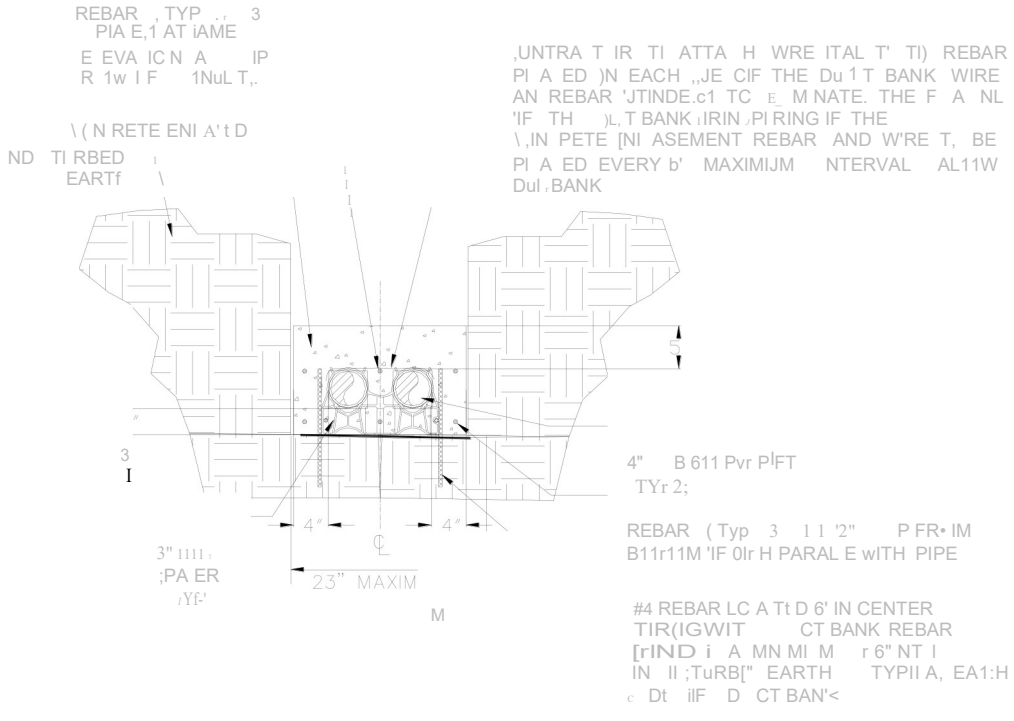

**Detail #6**
**Tri-Duct Detail**

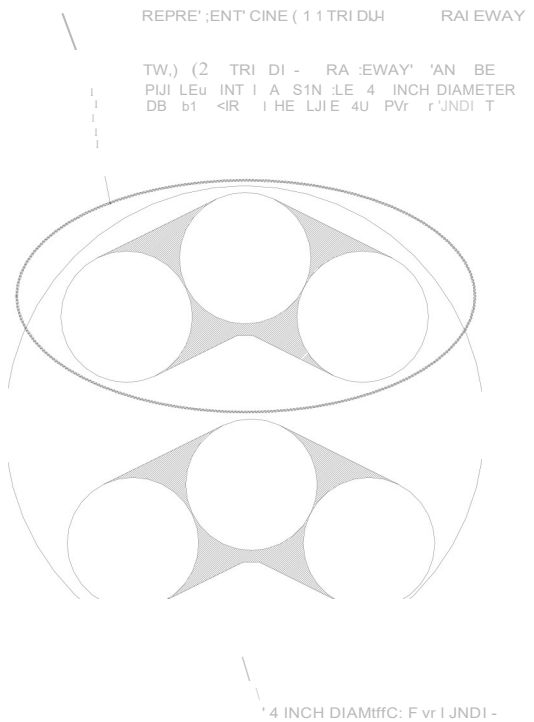


**Detail #7**
**Typical Cable Rack Support Detail**

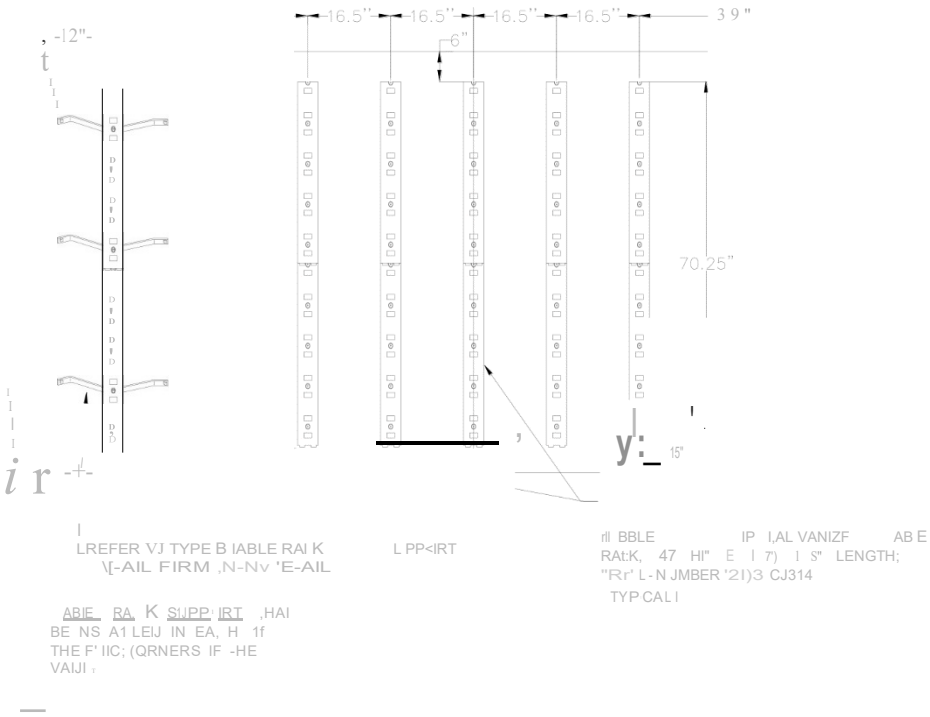

Detail #8
Typical "S" Cable Rack Support

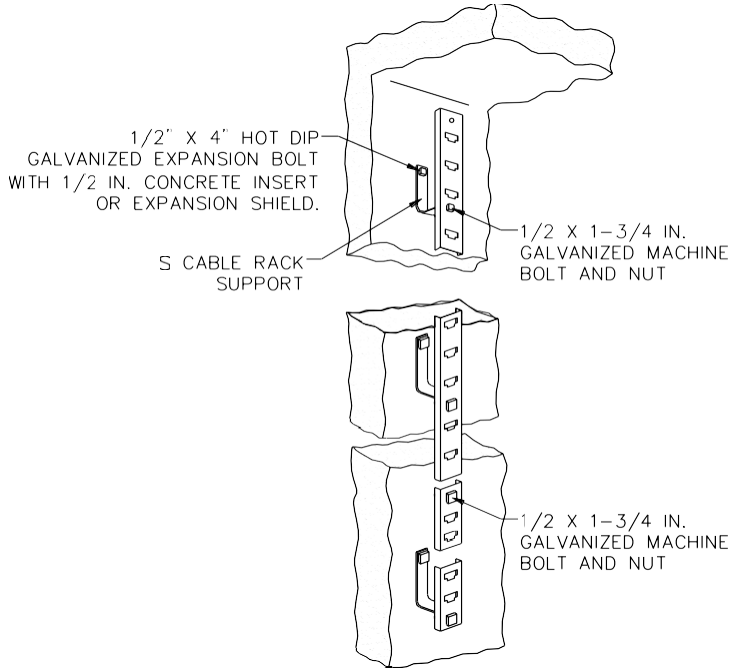


Detail #9
Typical "B" Cable Rack Support

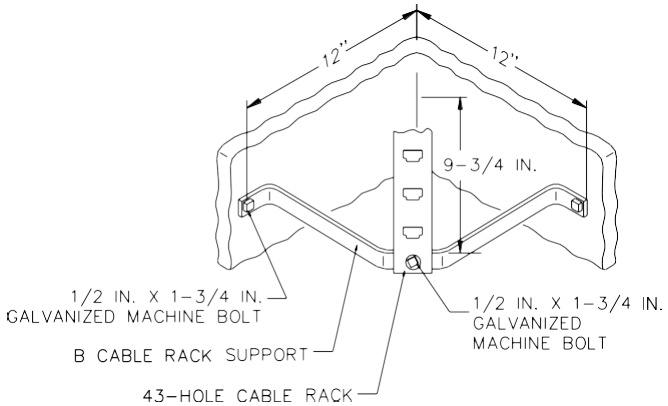


CABLE RACK SUPPORT SHALL BE INSTALLED IN EACH OF THE FOUR CORNERS OF THE VAULT

END OF SECTION